4993 - HILTON OF AMERICAS, HOUSTON
GUEST TOWER ROOM RENOVATION

ISSUE: 19-10-2018

KEY NOTES

SHEET NOTES

HILTON AMERICAS CONVENTION CENTER HOTEL

OWNER:

HOUSTON CONVENTION CENTER HOTEL CORPORATION

Two Houston Center
909 Fannin, Suite 3210
Houston TX 77010
Telephone 713.437.6898
Facsimile 713.437.6938

DEVELOPMENT MANAGER:

INTERIOR ARCHITECT:

Wilson Associates
Interior Architectural Design

3811 Turtle Creek Blvd.
16th Floor Dallas, Texas
75219 Tel (214) 521-6753
Fax (214) 521-0207

Issue	Date & Issue Description	By	Check
-- --	-- -- / -- -- / -- --	-- --	-- --

Seal/Signature

REGISTERED INTERIOR DESIGNER CONSTANCE H. JACKSON 1433 STATE OF TEXAS

Constance H. Jackson 10-18-2018

Project Name

HILTON AMERICAS CONVENTION CENTER HOTEL

Project Number

4993

CAD File Name

ID.00.DWG

Description

COVER SHEET

Scale

0 2" 4" 8" 16"

ID.00

©2001 Gensler

ELECTRICAL SYMBOLS

- SINGLE RECEPTACLE OUTLET (SOUT)
- DOUBLE RECEPTACLE OUTLET (DOUT)
- GFI OUTLET (DOUTGFI)
- QUADRUPLEX RECEPTACLE OUTLET (4OUT)
- DOUBLE OUTLET W/ONE HALF SWITCHED (DOUTSW)
- SWITCH (SW)
- THREE-WAY SWITCH (SW3)
- RECESSED CAN LIGHT (use circle command)
- RECESSED WALL-WASHER (WALLWASH)
- SURFACE MOUNTED LIGHT FIXTURE (SMTDLGT)
- FLUORESCENT FIXTURE (FLRSCFIX)
- SINGLE FACE EXIT SIGN (SFEXIT)
- DOUBLE FACE EXIT SIGN (DFEXIT)
- SINGLE RECEPTACLE FLOOR OUTLET (FLOUTS)
- DOUBLE RECEPTACLE FLOOR OUTLET (FLOUTD)
- TELEPHONE FLOOR OUTLET (FOUTT)
- SPRINKLER HEAD
- HOUSE TELEPHONE (TELEH)
- PUBLIC TELEPHONE (TELEP)
- TELEPHONE (TELE)
- TELEPHONE/DATA (TELE-D)
- TELEVISION OUTLET (TVOUT)
- TELEVISION OUTLET (SOLID) (TVSOL)
- FLOOR TELEVISION OUTLET (TVFLR)
- CLOCK OUTLET (CLOCKOUT)
- SMOKE DETECTOR (SMOKED)
- THERMOSTAT
- FIRE ALARM (FALARM)
- JUNCTION BOX (JBOX)
- CONTROL PANEL (CP)
- SPEAKER (SPEAKR)
- BLANK CONDUIT AND JUNCTION BOX (BCONDJB)
- WALL SCONCE (SCONCE)
- DOOR BELL (DRBELL)
- CHIME (CHIME)

THERMOSTAT

DRAWING SYMBOLS

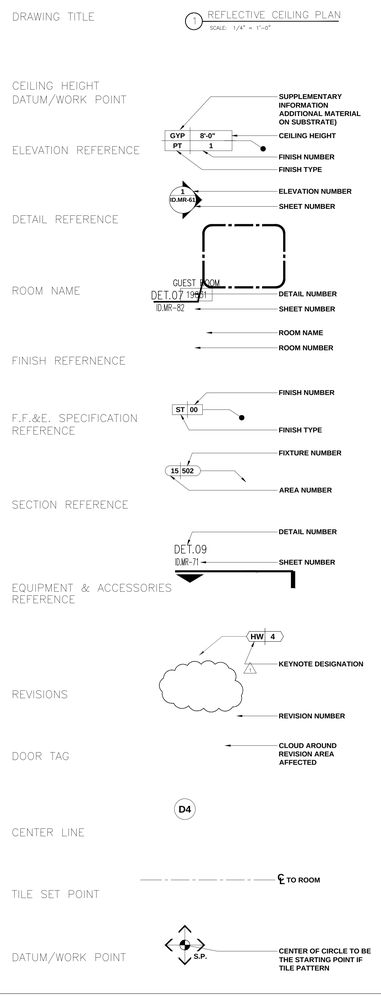

FINISH DESIGNATIONS

ACT	ACOUSTICAL CEILING TILE
AT	ACOUSTICAL TILE
AF	ARCHITECTURAL FINISH (REFERENCE ARCHITECTURAL DWGS.)
BR	BRICK
CP	CARPET
CT	CERAMIC TILE
DT	DECORATIVE TILE
FG	FIBERGLASS
GL	GLASS
MR	MIRROR
MT	METAL FINISH
PLAM	PLASTIC LAMINATE
PT	PAINT
QT	QUARRY TILE
RF	RESILENT FLOORING
SP	SPECIAL FINISH
ST	STONE
TC	TEXTURED TOP COAT
VWC	VINYL WALLCOVERING
WC	WALLCOVERING
WDT	TRANSPEARENT WOOD FINISH
WF	WALL FABRIC

GENERAL NOTES

1.0 General Notes

1.1 The American Institute of Architects standard form (AIA Document A201, 1987 Edition), General Conditions of the Contract for Construction- is hereby made a part of these Contract Documents.

1.2 The scope of work to be performed is as described in these general Notes, and as shown on the accompanying drawings, to be further supplemented by explanatory details as required. The work shall include all labor and materials required to complete the project as indicated in the Contract Documents.

1.3 The General Contractor shall notify Designer immediately if he cannot comply with all notes called for on this sheet and on all other Wilson & Associates drawings.

1.4 All design drawings and all construction notes are complementary, and what is called for by either will be binding as if called for by all. Any work shown, or referred to on any one set of drawings shall be provided as though shown on all related drawings.

1.5 All work listed or implied on the design drawing sheets or notes shall be supplied and installed by the General Contractor with the exception of:

1.5.1 Decorative lighting by FF&E (installed by contractor)
1.5.2 All other FF&E items (noted to be installed by contractor)
1.5.3 FF&E items installed by others

However, it is expected that the General Contractor shall closely coordinated his work with that of the contractors listed above to assure all schedules are met.

1.6 The construction notes and drawings are supplied to illustrate the design and general type of construction desired, and are intended to imply a premium quality of construction material and workmanship throughout.

1.7 The General Contractor, upon acceptance of drawings, assumes full responsibility for the construction, materials, and workmanship of the project described in these notes and drawings, and will be expected to comply with the spirit as well as the letter in which they were written.

1.8 The General Contractor shall maintain a current and complete set of construction documents on site during all phases of construction for use by all trades.

1.9 The General Contractor shall provide all necessary Protection for his work until turned over to the Client.

1.10 The General Contractor shall submit all fabrication shop drawings, and fixture cuts to the Designer for approval. All shop drawings and cuts signed approved shall supersede originating drawings in design appearance only. Contractor shall assume responsibility for errors in these drawings.

1.11 Prior to beginning work, the Contractor shall provide Wilson & Associates a construction schedule showing the chronological phases of his work, and all related work for the completion of the project. This schedule shall indicate all ordering lead time, length of time for each phase, its start and completion, with projected completion date.

1.12 The General Contractors, his sub-contractor, or any other contractor involved in this project shall take note that any cost caused by defective work, as a result of, but not limited to inferior workmanship or materials, improper scheduling or delinquent ordering shall be borne by the party responsible.

1.13 The General Contractors shall furnish weekly field progress reports to the Designer for all phases of construction.

1.14 The General Contractor shall file drawings with the department of Buildings, pay filing fee deposit and obtain approvals, and building permits.

1.15 All construction to be as per all applicable and governing codes and authorities. These drawings are intended to show the same.

1.16 All plans are drawn to scale as much as possible, but are not intended to be and should not be scaled.

1.17 Contractor shall furnish and install all requirements for safety according to local code.

1.18 Contractor shall coordinate all work to allow accessibility and use of all adjacent space.

1.19 During construction, each trade shall be responsible for repairing any damage caused by their work.

1.20 Refer to Architectural for all perimeter wall dimensions. Contractor to verify all dimensions, conditions, etc., prior to beginning construction and notify Architect in writhing of any discrepancies. Proceeding with work shall constitute acceptance of the Contractor that conditions are correct and the Contractor shall assume full responsibility.

1.21 Contractor to verify size, location and characteristics of all mechanical and electrical equipment and openings before construction and notify engineer of discrepancies. Contractor to verify all locations of Owner furnished equipment and prepare all surfaces accordingly.

1.22 "Typical" means typical for all similar conditions unless noted otherwise.

1.23 "Align" means similar components of construction (e.g., walls, jambs, etc.) shall align across voids or with existing wall.

1.24 Where it is deemed necessary to insure stability, contractor is to provide additional anchoring and/or blocking in stud partition for millwork. All surface blocking is be Millwork Contractor.

1.25 All sub-contractors to clean all areas during and after construction and make ready for other trades following. At final phase, leave area clean for move-in.

1.26 All wall angles are either 90 or 45 degrees unless noted otherwise.

1.27 All wood veneers, plywood, millwork, and blocking shall be fire retardant. Treated wood with a flame spread no greater than 200 and shall bear, prior to installation, the identification of an approved testing or inspection agency showing the performance rating thereof.

1.28 Refer to drawings for all details, sections and finish schedule.

1.29 Architect to coordinate any sprinkler heads, speakers, or specialty item located on the reflected ceiling plan with the interior design drawings.

1.30 Contractor is to submit catalog cuts for all visible electrical equipment, specifically, lighting fixtures, switches, buzzers, buttons, dimmers, special plates, gang plates and other equipment.

1.31 In public spaces where wall and telephone, electric and television outlets are clustered together, group outlets to centerline or cluster as close to each other as possible. Wall mounted electrical and telephone outlets are to be located 18" or as noted above finish floor, mounted horizontally at center of coverplate.

1.32 All floor mounted J-boxes to have flush mounted cover plates finish to be approved by designer.

1.33 Contractor to provide shop drawings on all handrails, millwork, marble or any other specialty items for approval by Designer.

1.34 Verify with Owner, method and disposal of demolition materials (if applicable).

1.35 Refer elevations for special door hardware allowances.

1.36 These design documents are intended to be a representation of the design intent. They in no way represent a complete millwork package or detailed shop drawings.

1.37 Refer to Architectural for door and hardware schedule.

1.38 All millwork noted to be stained or lacquered is to be the finish responsibility of the Millwork Contractor. All finishes to be shop finished.

1.39 Decorative pendants and Wall sconces are to be furnished by Owner and installed by General Contractor.

1.40 All wallcoverings are to be purchased by Owner and installed by the contractor.

1.41 All painted hardwood trim is to be painted with semi-gloss finish. All finishes to be shop finished.

1.42 Loudspeaker baffles, air grills, slot diffusers, access panels, fire cabinets, cover plate, sprinkler head escutcheon, light fixture trims, and vents are to be painted to match adjacent surface.

1.43 Errors, ambiguities, and omissions: Any errors, ambiguities and omissions in drawings and specifications shall be reported to the Owner and Designer for correction before any part of the work involved is started. Unless otherwise expressly stipulated, no additional allowances will be made in the Contractor's favor because of errors, ambiguities and/or omissions which should have been discovered by him during the preparation of the bid, and directed to the attention of the Owner and/or his agent.

1.44 Refer architectural for specifications.

1.45 Low lustre enamel paint on any wall surfaces referred to as paint.

1.46 All waterproofing in wet area to be specified by architect

1.47 No material shall be used that contributes to toxic fumrs.

1.48 All air spaces behind interior "decorative" features need to be fire stopped at 7'-0" in all directions to prevent a chimney effect in case of fire.

ABBREVIATIONS

AFF	Above Finished Floor
AD	Access Door
AC.	Acoustical
AWC	Acoustical Wall Covering
ADJ.	Adjustable
A/C	Air Conditioning
ALT.	Alternate
AL.	Aluminum
AB	Anchor Bolt
∠	Angle
APPR.	Approximate
ARCH.	Architectural
AP	Armor Plate
@	At
BRG.	Bearing
BM	Bench Mark
BLK.	Block(ing)
BOT.	Bottom
BLDG.	Brick Courses(ing)
BLDG.P.	Building Paper
BUR	Built Up Roofing
BVC.	Beverage Center
CAR.	Carpet
CIP	Cast In Place
CI	Cast Iron
CB	Catch Basin
CLG.	Ceiling
℄	Centerline
cm	Centimeter
CT	Ceramic Tile
[	Channel
CO	Clean Out
CLR.	Clear
CLO.	Closet
COL.	Column
COMPO.	Composition
CONC.	Concrete
CMU	Concrete Masonry Unit
CONT.	Continuous
C.J.	Control Joint
CG	Corner Guard
CORR.	Corridor
CF	Cubic Foot (Feet)
CFM	Cubic Foot per Minute
CY	Cubic Yard
DPF.	Dampproofing
DEMO.	Demolition
D.	Depth
DET.	Detail
ø	Diameter
DIM.	Dimension
DISP.	Disperser
DBL.	Double
DN.	Down
DO.	Downspout
DWG.	Drawing
EA.	Each
ELEC.	Electrical
ELEV.	Elevator or Elevation
EPDM	Ethylene Propylene Diene Monomer (Roof Membrane)
EMER.	Emergency
EQ.	Equal
EQUIP.	Equipment
EXIST.	Existing
EXP.A.	Expansion Anchor
E.J.	Expansion Joint
EXT.	Exterior
EIS	Exterior Insulation System
EWC.	Electric Water Cooler
F.	Fahrenheit
FWC	Fabric Wall Covering
FI	Film Illuminator
FF	Finish Floor
FIN.	Finish(ed)
FA	Fire Alarm
FEC	Fire Extinguisher Cabinet
FHC	Fire Hose Cabinet
FVC	Fire Valve Cabinet
FRTW	Fire Retardant Treated Wood
FLASH.	Flashing
FL	Floor
FLM	Full Length Mirror
FD	Floor Drain
FLUOR.	Fluorescent
FTG.	Footing
FUR.	Furring
GA	Gage
GALV.	Galvanized
GL.	Glass or Glazing
GNV	Goose Neck Ventilator
GB	Grab Bar
GYP.	Gypsum
GYP.BD.	Gypsum Board
HRL.	Handrail
HDW.	Hardware
HVAC	Heating, Ventilating, Air Conditioning
H.	Height
HM	Hollow Metal
HB	Hose Bibb
HR.	Hour
HS	Hot Stack
IBD.	Iron Board
ID	Inside Diameter
INSUL.	Insulation
JAN.	Janitor
JT.	Joint
J.T.B.	Joint Backer
K.P.	Kick Plate
KIT.	Kitchen
KO	Knockout
L.	Length
LAB.	Laboratory
LAM.GL.	Laminated Glass
LAV.	Lavatory
lbf	Pounds-Force
LLV	Long Leg Vertical
MFR.	Manufacturer
MAS.	Masonry
MASC.	Masonry Coursing
MO	Masonry Opening
MAX.	Maximum
MECH.	Mechanical
MEMB.	Membrane
MV	Membrane Vent
MET.	Metal
MEZZ.	Mezzanine
mm	Millimeter
MIN.	Minimum
MISC.	Miscellaneous
NOM.	Nominal
NIC	Not in Contract
NTS	Not to Scale
NO.	Number
OFF.	Office
OC.	On Center
OPG.	Opening
OPP.	Opposite
OH.	Opposite Hand
OD	Outside Diameter
OF	Overflow
OFCI	Owner Furnished, Contractor Installed
PNT.	Paint
PR.	Pair
PART.	Partition/Partial
PERIM.	Perimeter
PP	Pitch Pocket
PL.	Plaster
P.LAM.	Plastic Laminate
ℙ	Plate or Property Line
PWD.	Plywood
PRV	Powered Roof Ventilator
#,LBS.	Pounds
PSF	Pounds per Square Foot
PSI	Pounds / Square In.
PT	Pressure Treated
RAD.	Radius
RL	Rain Leader
RECP.	Receptacle
REF.	Reference
REFR.	Refrigerator
REINF.	Reinforced
REP.	Repair
REQ.	Require(d)
RES.	Resilient
REV.	Revision
	Riser
RD	Roof Drain
RM	Room
RO	Rough Opening
RUB.	Rubber
SND	Sanitary Napkin Dispenser
SC.	Scupper
SECT.	Section
SS	Service Sink
SV	Sheet Vinyl
SHWR.	Shower
SIM.	Similar
SPM	Single Ply Membrane
SD	Soap Dispenser
SSM	Solid Surfacing Mat.
SPEC.	Specification
S.ST.	Stainless Steel
STR	Stair
SP	Stand Pipe
ST.	Steel
STOR.	Storage
STRUC.	Structural
SUSP.	Suspended
SYS.	System
TEL.	Telephone
T.GL.	Tempered Glass
THK.	Thick
THR.	Threshold
TWS	Thru-Wall Scupper
TTD	Toilet Tissue Dispenser
T.CONC.	Top of Concrete
TC	Top of Curb
T.MAS.	Top of Masonry
T.S.	Top of Slab
T.ST.	Top of Steel
T&G	Tongue & Groove
TYP.	Typical
U.C.	Under Counter
V.C.	Valve Cabinet
V.B.	Vapor Barrier
V.P.	Vent Pipe
VERT.	Vertical
VEST.	Vestibule
VCT	Vinyl Composition Tile
VFS	Vinyl Feature Strip
VWC	Vinyl Wall Covering
WSCT.	Wainscot
W.H.	Water Heater
WPF.	Waterproofing
WT.	Weight
W.W.F.	Welded Wire Fabric
	Width
W/	With
W/O	Without
WD.	Wood
WDB.	Wood Base
W.PT.	Work Point
W.	

SHEET INDEX

Sheet List Table

OCT. 09, 2017 95% CD	Sheet Number	Sheet Title
●	ID.00	COVER SHEET
●	ID.01	INDEX & GENERAL NOTES
●	ID.02	INDEX
		PLANS
●	ID.100.06	KEY PLAN - LEVEL 6
●	ID.100.07	KEY PLAN - LEVEL 7
●	ID.100.08-16	KEY PLAN - LEVEL 8
●	ID.100.09-16	KEY PLAN - LEVEL 9 - 16 (TYPICAL)
●	ID.100.17	KEY PLAN - LEVEL 17
●	ID.100.18	KEY PLAN - LEVEL 18
●	ID.100.19	KEY PLAN - LEVEL 19
●	ID.100.20	KEY PLAN - LEVEL 20
●	ID.100.21	KEY PLAN - LEVEL 21
●	ID.100.22	KEY PLAN - LEVEL 22
●	ID.150	ROOM MATRIX
●	ID.200.TC-01.W	TYPICAL CORRIDOR - LEVELS 8 - 17 - FLOOR PLAN
●	ID.200.TC-02.W	TYPICAL CORRIDOR - LEVELS 8 - 17 - REFLECTED CEILING PLAN
●	ID.200.TC-03.W	TYPICAL CORRIDOR - LEVELS 8 - 17 - ELECTRICAL PLAN
●	ID.200.TC-04.W	TYPICAL CORRIDOR - LEVELS 8 - 17 - FURNISHING PLAN
●	ID.200.TC-01.E	TYPICAL CORRIDOR - LEVELS 8 - 17 - FLOOR PLAN
●	ID.200.TC-02.E	TYPICAL CORRIDOR - LEVELS 8 - 17 - REFLECTED CEILING PLAN
●	ID.200.TC-03.E	TYPICAL CORRIDOR - LEVELS 8 - 17 - ELECTRICAL PLAN
●	ID.200.TC-04.E	TYPICAL CORRIDOR - LEVELS 8 - 17 - FURNISHING PLAN
●	ID.201.C6-7.E	LEVEL 6 - 7 CORRIDOR - FLOOR PLAN
●	ID.201A.C6-7.E	LEVEL 6 - 7 CORRIDOR - REFLECTED CEILING PLAN
●	ID.201B.C6-7.E	LEVEL 6 - 7 CORRIDOR - ELECTRICAL PLAN
●	ID.201C.C6-7.E	LEVEL 6 - 7 CORRIDOR - FURNISHING PLAN
●	ID.201D.C6-7.E	LEVEL 6 - 7 CORRIDOR - FLOOR FINISH PLAN
●	ID.201.C6-7.W	LEVEL 6 - 7 CORRIDOR - FLOOR PLAN
●	ID.201A.C6-7.W	LEVEL 6 - 7 CORRIDOR - REFLECTED CEILING PLAN
●	ID.201B.C6-7.W	LEVEL 6 - 7 CORRIDOR - ELECTRICAL PLAN
●	ID.201C.C6-7.W	LEVEL 6 - 7 CORRIDOR - FURNISHING PLAN
●	ID.201D.C6-7.W	LEVEL 6 - 7 CORRIDOR - FLOOR FINISH PLAN
●	ID.202.C18.E	LEVEL18 CORRIDOR - FLOOR PLAN
●	ID.202A.C18.E	LEVEL 18 CORRIDOR - REFLECTED CEILING PLAN
●	ID.202B.C18.E	LEVEL 18 CORRIDOR - ELECTRICAL PLAN
●	ID.202C.C18.E	LEVEL 18 CORRIDOR - FURNISHING PLAN
●	ID.202D.C18.E	LEVEL 18 CORRIDOR - FLOOR FINISH PLAN
●	ID.202.C18.W	LEVEL18 CORRIDOR - FLOOR PLAN
●	ID.202A.C18.W	LEVEL 18 CORRIDOR - REFLECTED CEILING PLAN
●	ID.202B.C18.W	LEVEL 18 CORRIDOR - ELECTRICAL PLAN
●	ID.202C.C18.W	LEVEL 18 CORRIDOR - FURNISHING PLAN
●	ID.202D.C18.W	LEVEL 18 CORRIDOR - FLOOR FINISH PLAN

KEY NOTES

SHEET NOTES

HILTON AMERICAS CONVENTION CENTER HOTEL

OWNER:
HOUSTON CONVENTION CENTER HOTEL CORPORATION
DEVELOPMENT MANAGER:

Two Houston Center
909 Fannin, Suite 3210
Houston TX 77010
Telephone 713.437.6898
Facsimile 713.437.6938

INTERIOR ARCHITECT:
Wilson Associates
Interior Architectural Design

3811 Turtle Creek Blvd.
16th Floor Dallas, Texas
75219 Tel (214) 521-6753
Fax (214) 521-0207

Issue	Date & Issue Description	By	Check
--	-- -- / -- --	--	--

Seal/Signature

REGISTERED INTERIOR DESIGNER LORRAINE H. JACKSON 1433 STATE OF TEXAS

Lorraine H. Jackson 10-18-2018

Project Name
HILTON AMERICAS CONVENTION CENTER HOTEL

Project Number
4993

CAD File Name
ID.01~02.DWG

Description
INDEX & GENERAL NOTES

Scale
0 2" 4" 8" 16"

ID.01

©2001 Gensler

Sheet List Table

OCT. 09, 2017 95% CD	Sheet Number	Sheet Title
●	ID.203.C19.E	LEVEL19 CORRIDOR - FLOOR PLAN
●	ID.203A.C19.E	LEVEL 19 CORRIDOR - REFLECTED CEILING PLAN
●	ID.203B.C19.E	LEVEL 19 CORRIDOR - ELECTRICAL PLAN
●	ID.203C.C19.E	LEVEL 19 CORRIDOR - FURNISHING PLAN
●	ID.203D.C19.E	LEVEL 19 CORRIDOR - FLOOR FINISH PLAN
●	ID.203.C19.W	LEVEL19 CORRIDOR - FLOOR PLAN
●	ID.203A.C19.W	LEVEL 19 CORRIDOR - REFLECTED CEILING PLAN
●	ID.203B.C19.W	LEVEL 19 CORRIDOR - ELECTRICAL PLAN
●	ID.203C.C19.W	LEVEL 19 CORRIDOR - FURNISHING PLAN
●	ID.203D.C19.W	LEVEL 19 CORRIDOR - FLOOR FINISH PLAN
●	ID.204.C20	LEVEL 20 CORRIDOR - FLOOR PLAN
●	ID.204A.C20	LEVEL 20 CORRIDOR - REFLECTED CEILING PLAN
●	ID.204B.C20	LEVEL 20 CORRIDOR - ELECTRICAL PLAN
●	ID.204C.C20	LEVEL 20 CORRIDOR - FURNISHING PLAN
●	ID.204D.C20	LEVEL 20 CORRIDOR - FLOOR FINISH PLAN
●	ID.205.C21	LEVEL 21 CORRIDOR - FLOOR PLAN
●	ID.205A.C21	LEVEL 21 CORRIDOR - REFLECTED CEILING PLAN
●	ID.205B.C21	LEVEL 21 CORRIDOR - ELECTRICAL PLAN
●	ID.205C.C21	LEVEL 21 CORRIDOR - FURNISHING PLAN
●	ID.205D.C21	LEVEL 21 CORRIDOR - FLOOR FINISH PLAN
●	ID.205.C22	LEVEL 22 CORRIDOR - FLOOR PLAN
●	ID.205A.C22	LEVEL 22 CORRIDOR - REFLECTED CEILING PLAN
●	ID.205B.C22	LEVEL 22 CORRIDOR - ELECTRICAL PLAN
●	ID.205C.C22	LEVEL 22 CORRIDOR - FURNISHING PLAN
●	ID.205D.C22	LEVEL 22 CORRIDOR - FLOOR FINISH PLAN
●	ID.201.C6-7.E	LEVEL 6 - 7 CORRIDOR - FURNISHING PLAN
●	ID.201.C18.W	LEVEL 18 CORRIDOR - FURNISHING PLAN
●	ID.201.C18.E	LEVEL 18 CORRIDOR - FURNISHING PLAN
●	ID.201.C19.W	LEVEL 19 CORRIDOR - FURNISHING PLAN
●	ID.201.C19.E	LEVEL 19 CORRIDOR - FURNISHING PLAN
●	ID.201.C20	LEVEL 20 CORRIDOR - FURNISHING PLAN
●	ID.201.C21-22	LEVEL 21 & 22 CORRIDOR - FURNISHING PLAN
		PLAN SHEETS CONTAIN: FLOORING PLAN, REFLECTED CEILING PLAN, FLOOR COVERING PLAN, FURNISHING & ELECTRICAL PLAN AS
●	ID.210.01	ELEVATOR LOBBY ENLARGED - LOWER LEVELS
●	ID.210.02	ELEVATOR LOBBY ENLARGED - LOWER LEVELS
●	ID.210.03	ELEVATOR LOBBY ENLARGED - UPPER LEVELS
●	ID.210.04	ELEVATOR LOBBY ENLARGED - UPPER LEVELS
		GUESTROOM K-2, K-3, K-4, K-5 - FURNISHING PLAN PLAN, FLOOR COVERING PLAN, FURNISHING & ELECTRICAL PLAN AS NEEDED
●	ID.220.K1	GUESTROOM K-1 (SHOWER)
●	ID.220.DQ1	GUESTROOM DQ-1 (SHOWER)
●	ID.220.DQ1	GUESTROOM DQ-2 (TUB)
●	ID.220.PS1	PARLOR S-1
●	ID.220.K2-5	GUESTROOM K-6, K-7HC, K-8HC, K-9 - FURNISHING PLAN
●	ID.220.K6-9	GUESTROOM K-6, K-7HC, K-8HC, K-9 - FURNISHING PLAN

Sheet List Table

OCT. 09, 2017 95% CD	Sheet Number	Sheet Title
●	ID.220.DQ3-6	GUESTROOM DQ-3, DQ-4, DQ-5, DQ-6 - FURNISHING PLAN
●	ID.220.DQ7-8	GUESTROOM DQ-7HC, DQ-8HC - FURNISHING PLAN
●	ID.220.PS2.6.5	PARLOR S-3HC, S-6, LAMAR SUITE S-5 - FURNISHING PLAN
●	ID.220.PS3-4	PARLOR S-3, S-4 - FURNISHING PLAN
●	ID.220.PS11	PARLOR S-11HC - FURNISHING PLAN
●	ID.220.PRS7	PRESIDENTIAL SUITE S-7 - FURNISHING PLAN
●	ID.220.PRS8	PRESIDENTIAL SUITE S-8 - FURNISHING PLAN
●	ID.220.PRS9	PRESIDENTIAL SUITE S-9HC - FURNISHING PLAN
●	ID.220.PRS10	PRESIDENTIAL SUITE S-10HC - FURNISHING PLAN
●	ID.220.TYP	TYPICAL GUESTROOM BATHROOM DEMO PLAN & ELEVATIONS
		ELEVATIONS
●	ID.300.TC8-17	TYPICAL CORRIDOR - LEVELS 8 - 17 - ELEVATIONS
●	ID.300A.TC8-17	TYPICAL CORRIDOR - LEVELS 8 - 17 - ELEVATIONS
●	ID.301.TC8-17	TYPICAL CORRIDOR - LEVELS 8 - 17 - ELEVATIONS
●	ID.301A.TC8-17	TYPICAL CORRIDOR - LEVELS 8 - 17 - ELEVATIONS
●	ID.302.C6-7	CORRIDOR LEVELS 6 - 7 KEY ELEVATIONS
●	ID.302A.C6-7	CORRIDOR LEVELS 6 - 7 KEY ELEVATIONS
●	ID.303.C17	CORRIDOR LEVELS 17 KEY ELEVATIONS
●	ID.304.C18-19	CORRIDOR LEVELS 18 - 19 KEY ELEVATIONS
●	ID.305.C19-22	CORRIDOR LEVELS 19 - 22 KEY ELEVATIONS
●	ID.310.EL	ELEVATOR LOBBY UPPER & LOWER LEVELS - ELEVATIONS
●	ID.320.K1	GUESTROOM K-1 - ELEVATIONS
●	ID.321.DQ1-2	GUESTROOM DQ-1 ELEVATIONS
●	ID.321A.DQ1-2	GUESTROOM DQ-1 ELEVATIONS
●	ID.322.K2-5	GUESTROOM K-2, 3, 4 & 5 KEY ELEVATIONS
●	ID.323.K6-8	GUESTROOM K-6, 7 & 8 KEY ELEVATIONS
●	ID.324.DQ3-6	GUESTROOM DQ-3, 4, 5 & 6 KEY ELEVATIONS
●	ID.325.DQ7-8	GUESTROOM DQ-7 & 8 KEY ELEVATIONS
●	ID.330.PS1	PARLOR S-1 - ELEVATIONS
●	ID.331.PS2.5.6	PARLOR S-2, 5 & 6 KEY ELEVATIONS
●	ID.331A.PS2.5.6	PARLOR S-2, 5 & 6 KEY ELEVATIONS
●	ID.332.PS.3.4.11	PARLOR S-3, 4 & 11 ELEVATIONS
●	ID.332A.PS.3.4.11	PARLOR S-3, 4 & 11 ELEVATIONS
●	ID.332B.PS.3.4.11	PARLOR S-3, 4 & 11 ELEVATIONS
●	ID.333.PS7-8	PRESIDENTIAL SUITES S-7 & 8 KEY ELEVATIONS
●	ID.334.PS9-10	PRESIDENTIAL SUITES S-9 & 10 KEY ELEVATIONS
●	ID.334A.PS9-10	PRESIDENTIAL SUITES S-9 & 10 KEY ELEVATIONS
		DETAILS
●	ID.400	TYPICAL DETAILS
●	ID.410	VANITY DETAILS
●	ID.420A	TUB DETAILS
●	ID.430	DOOR DETAILS
●	ID.441	MILLWORK DETAILS - BEVERAGE CENTER & DESK

KEY NOTES

SHEET NOTES

HILTON AMERICAS CONVENTION CENTER HOTEL

OWNER:

HOUSTON CONVENTION CENTER HOTEL CORPORATION

Two Houston Center
909 Fannin, Suite 3210
Houston TX 77010
Telephone 713.437.6898
Facsimile 713.437.6938

DEVELOPMENT MANAGER:

INTERIOR ARCHITECT:

Wilson Associates
Interior Architectural Design

3811 Turtle Creek Blvd.
16th Floor Dallas, Texas
75219 Tel (214) 521-6753
Fax (214) 521-0207

Issue	Date & Issue Description	By	Check
--	-- -- / -- -- / -- --	--	-- --

Seal/Signature

REGISTERED INTERIOR DESIGNER
CONSTANCE H. JACKSON
1433
STATE OF TEXAS

Constance H. Jackson

Project Name 10-18-2018

HILTON AMERICAS CONVENTION CENTER HOTEL

Project Number

4993

CAD File Name

ID.01~02.DWG

Description

INDEX

Scale

0 2" 4" 8" 16"

ID.02

© 2001 Gensler

LEVEL-06 ROOM ANALYSIS	
ROOM TYPE	QUANTITY
K-1	11
K-2	12
K-3	3
K-4	2
K-5	1
K-6	0
K-7	0
K-8 HC	1
K-9	0
K-10	1
K-11	1
DQ-1	37
DQ-2	13
DQ-3	1
DQ-4	1
DQ-5	0
DQ-6	0
DQ-7 HC	1
DQ-8 HC	1
S-1	0
S-2	1
S-3	0
S-4	0
S-5	0
S-6	0
S-7	0
S-8	0
S-9	0
S-10	0
S-11 HC	1
TOTAL	88

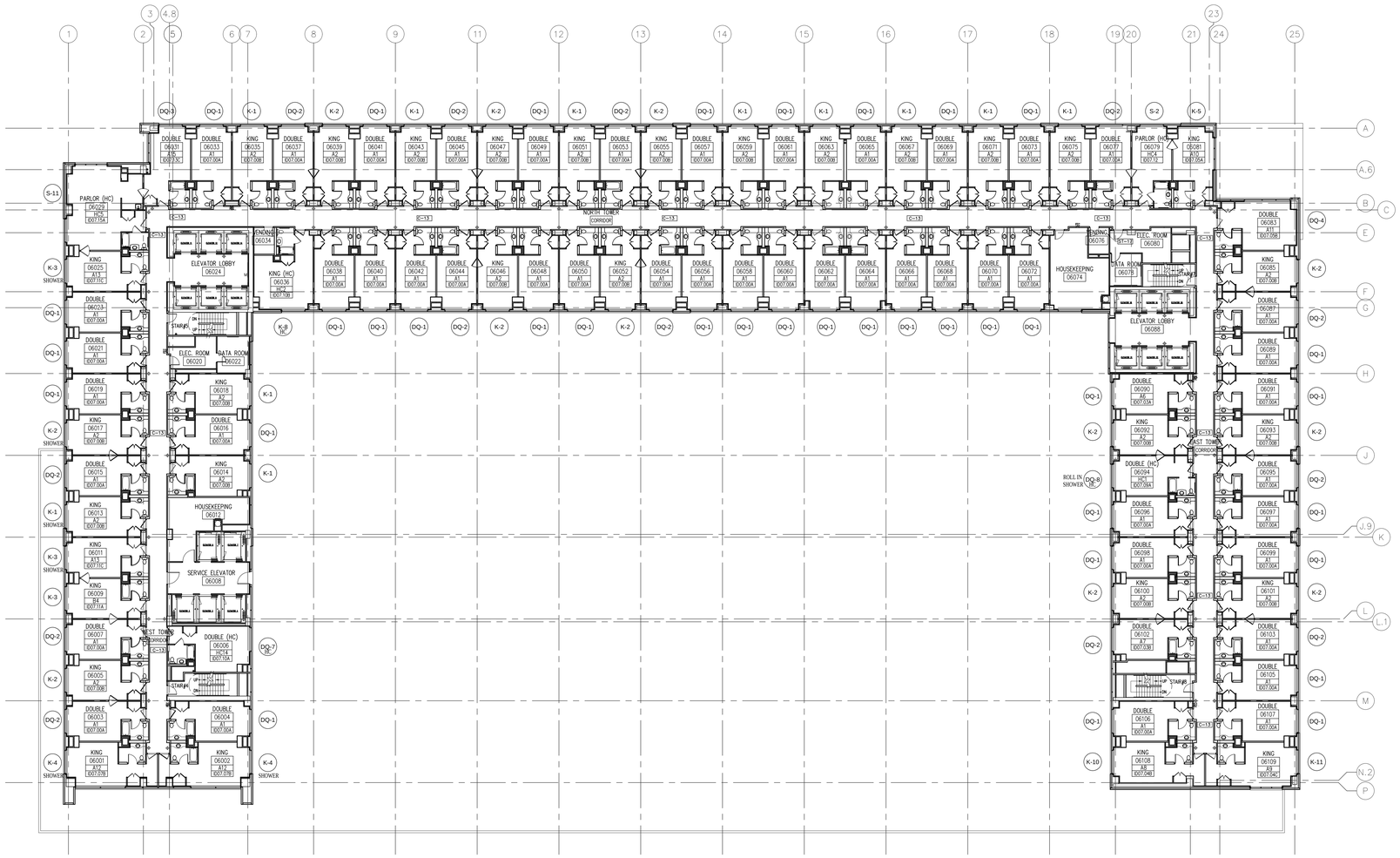

1 KEY PLAN LEVEL–06
Scale: 1/16"=1'–0"

KEY NOTES

SHEET NOTES

HILTON AMERICAS CONVENTION CENTER HOTEL

OWNER:

HOUSTON CONVENTION CENTER HOTEL CORPORATION

DEVELOPMENT MANAGER:

Two Houston Center
909 Fannin, Suite 3210
Houston TX 77010
Telephone 713.437.6898
Facsimile 713.437.6938

INTERIOR ARCHITECT:

Wilson Associates
Interior Architectural Design

3811 Turtle Creek Blvd.
16th Floor Dallas, Texas
75219 Tel (214) 521-6753
Fax (214) 521-0207

Issue	Date & Issue Description	By	Check
--	--/--/--	--	--

Seal/Signature

REGISTERED INTERIOR DESIGNER CONSTANCE H. JACKSON 1433 STATE OF TEXAS

Constance H. Jackson 10-18-2018

Project Name
HILTON AMERICAS CONVENTION CENTER HOTEL

Project Number
4993

CAD File Name
ID.100.06

Description
KEY PLAN – LEVEL 6

Scale
0 2" 4" 8" 16"

ID.100.06

© 2001 Gensler

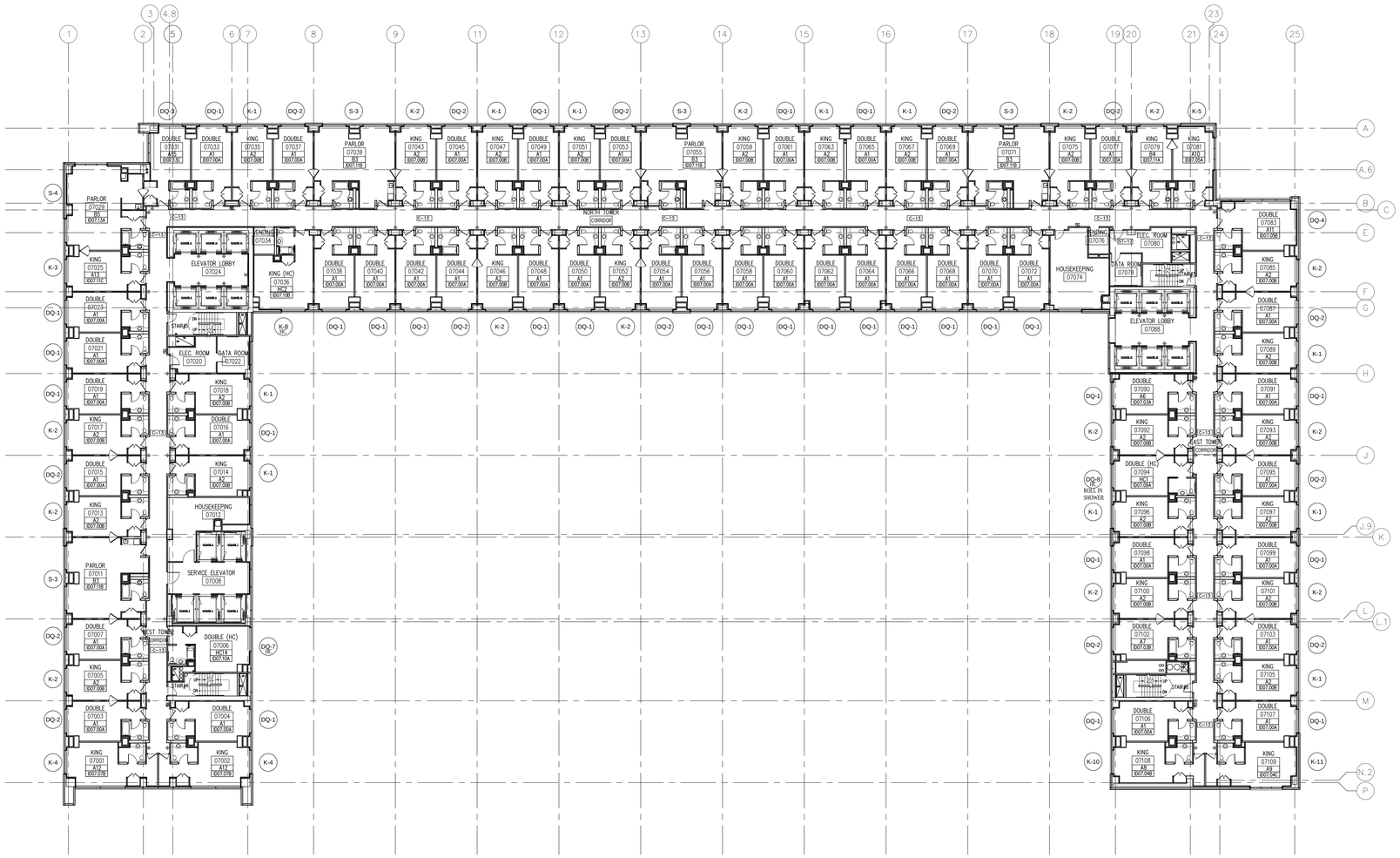

LEVEL-07 ROOM ANALYSIS	
ROOM TYPE	QUANTITY
K-1	11
K-2	14
K-3	1
K-4	2
K-5	1
K-6	0
K-7	0
K-8 HC	1
K-9	0
K-10	1
K-11	1
DQ-1	30
DQ-2	13
DQ-3	1
DQ-4	1
DQ-5	0
DQ-6	0
DQ-7 HC	1
DQ-8 HC	1
S-1	0
S-2	0
S-3	4
S-4	1
S-5	0
S-6	0
S-7	0
S-8	0
S-9	0
S-10	0
S-11	0
TOTAL	84

KEY NOTES

SHEET NOTES

HILTON AMERICAS CONVENTION CENTER HOTEL

OWNER:

HOUSTON CONVENTION CENTER HOTEL CORPORATION

Two Houston Center
909 Fannin, Suite 3210
Houston TX 77010
Telephone 713.437.6898
Facsimile 713.437.6938

DEVELOPMENT MANAGER:

INTERIOR ARCHITECT:

Wilson Associates
Interior Architectural Design

3811 Turtle Creek Blvd.
16th Floor Dallas, Texas
75219 Tel (214) 521-6753
Fax (214) 521-0207

Issue	Date & Issue Description	By	Check
--	-- -- / -- -- / -- --	--	--

Seal/Signature

REGISTERED INTERIOR DESIGNER CONSTANCE H. JACKSON 1433 STATE OF TEXAS

10-18-2018

Project Name

HILTON AMERICAS CONVENTION CENTER HOTEL

Project Number

4993

CAD File Name

ID.100.07

Description

KEY PLAN – LEVEL 7

Scale

0 2" 4" 8" 16"

ID.100.07

© 2001 Gensler

1 KEY PLAN LEVEL–07
Scale: 1/16"=1'–0"

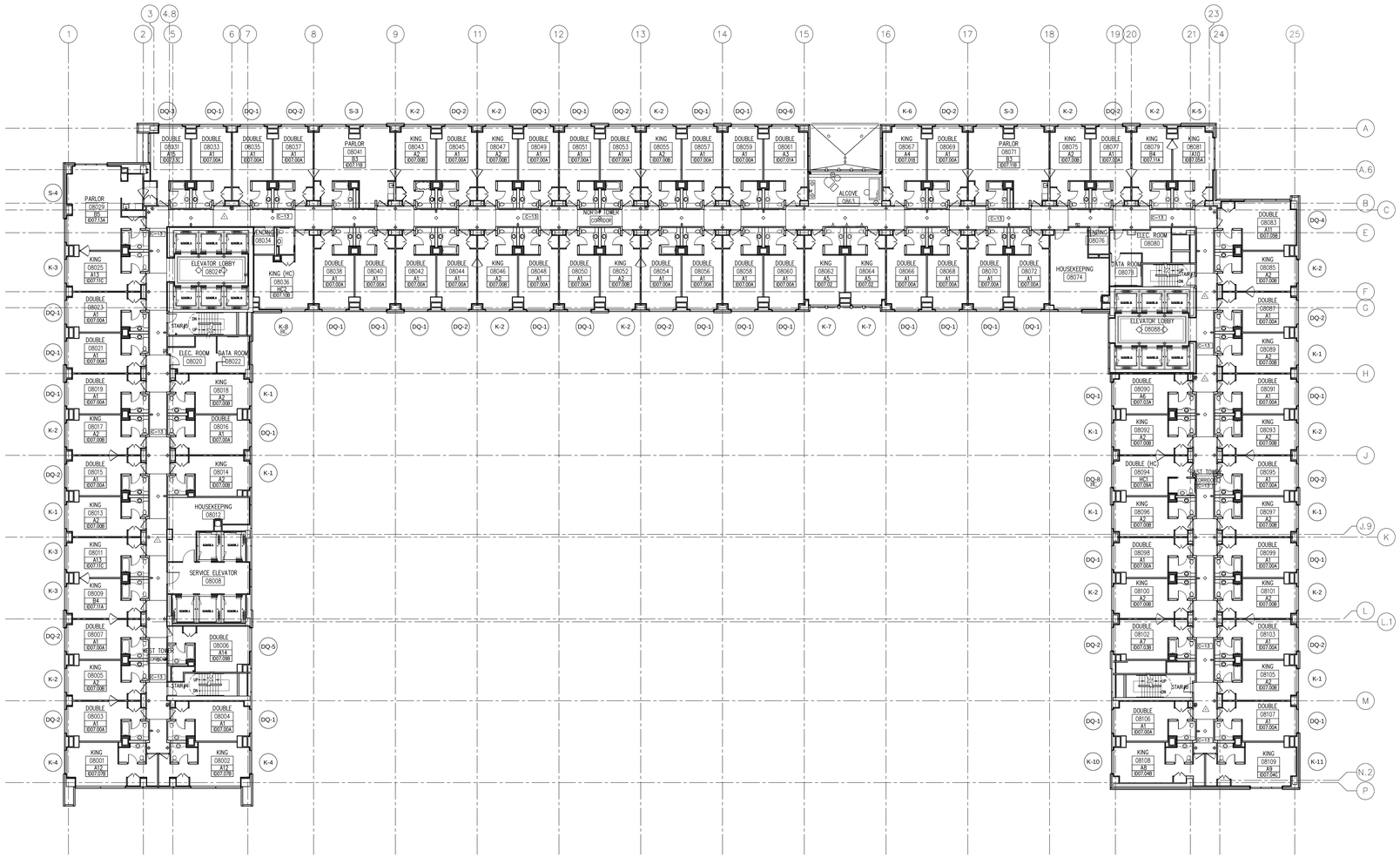

1 KEY PLAN LEVEL-08
Scale: 1/16"=1'-0"

LEVEL-08 ROOM ANALYSIS	
ROOM TYPE	QUANTITY
K-1	8
K-2	13
K-3	3
K-4	2
K-5	1
K-6	1
K-7	2
K-8 HC	1
K-9	0
K-10	1
K-11	1
DQ-1	29
DQ-2	14
DQ-3	1
DQ-4	1
DQ-5	1
DQ-6	1
DQ-7 HC	0
DQ-8 HC	1
S-1	0
S-2	0
S-3	2
S-4	1
S-5	0
S-6	0
S-7	0
S-8	0
S-9	0
S-10	0
S-11	0
TOTAL	84

KEY NOTES

SHEET NOTES

HILTON AMERICAS CONVENTION CENTER HOTEL

OWNER:

HOUSTON CONVENTION CENTER HOTEL CORPORATION

Two Houston Center
909 Fannin, Suite 3210
Houston TX 77010
Telephone 713.437.6898
Facsimile 713.437.6938

DEVELOPMENT MANAGER:

INTERIOR ARCHITECT:

Wilson Associates
Interior Architectural Design

3811 Turtle Creek Blvd.
16th Floor Dallas, Texas
75219 Tel (214) 521-6753
Fax (214) 521-0207

Issue	Date & Issue Description	By	Check
--	--/--/--	--	--

Seal/Signature

REGISTERED INTERIOR DESIGNER
CONSTANCE H. JACKSON
1433
STATE OF TEXAS

Constance H. Jackson

10-18-2018

Project Name

HILTON AMERICAS CONVENTION CENTER HOTEL

Project Number

4993

CAD File Name

ID.100.08.DWG

Description

KEY PLAN - LEVELS 8

Scale

0 2" 4" 8" 16"

ID.100.08

© 2001 Gensler

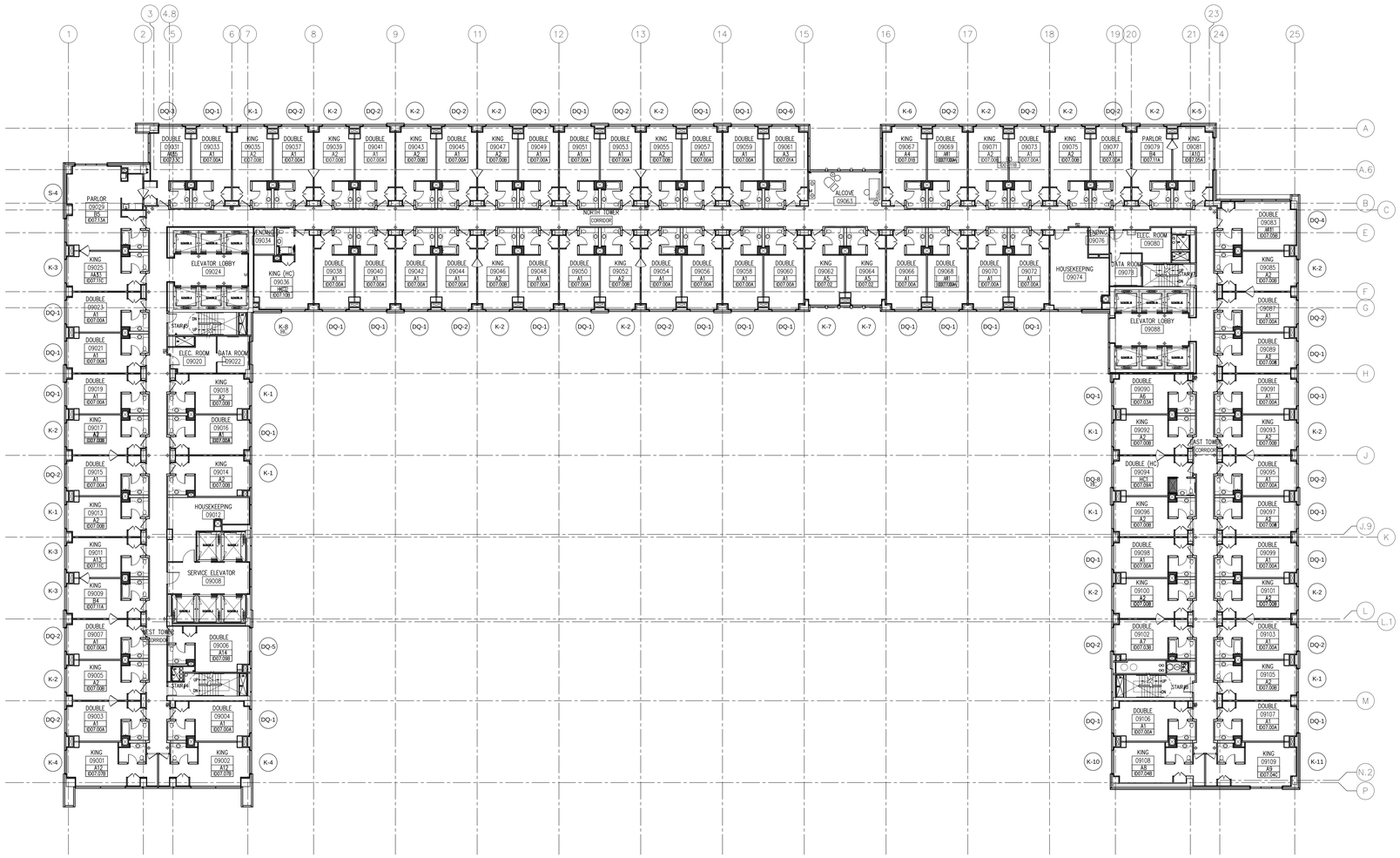

LEVEL-09-16 ROOM ANALYSIS	
ROOM TYPE	QUANTITY
K-1	7
K-2	15
K-3	3
K-4	2
K-5	1
K-6	1
K-7	2
K-8 HC	1
K-9	0
K-10	1
K-11	1
DQ-1	30
DQ-2	16
DQ-3	1
DQ-4	1
DQ-5	1
DQ-6	1
DQ-7 HC	0
DQ-8 HC	1
S-1	0
S-2	0
S-3	0
S-4	1
S-5	0
S-6	0
S-7	0
S-8	0
S-9	0
S-10	0
S-11	0
TOTAL	86

KEY NOTES

SHEET NOTES

1 TYPICAL KEY PLAN LEVEL–09–16
Scale: 1/16"=1'–0"

HILTON AMERICAS CONVENTION CENTER HOTEL

OWNER:

HOUSTON CONVENTION CENTER HOTEL CORPORATION

Two Houston Center
909 Fannin, Suite 3210
Houston TX 77010
Telephone 713.437.6898
Facsimile 713.437.6938

DEVELOPMENT MANAGER:

INTERIOR ARCHITECT:

Wilson Associates
Interior Architectural Design

3811 Turtle Creek Blvd.
16th Floor Dallas, Texas
75219 Tel (214) 521-6753
Fax (214) 521-0207

Issue	Date & Issue Description	By	Check
--	--/--/--	--	--

Seal/Signature

REGISTERED INTERIOR DESIGNER CONSTANCE H. JACKSON 1433 STATE OF TEXAS

Constance H. Jackson 10-18-2018

Project Name
HILTON AMERICAS CONVENTION CENTER HOTEL

Project Number
4993

CAD File Name
ID.100.09.DWG

Description
TYPICAL KEY PLAN – LEVELS 9–16

Scale
0 2" 4" 8" 16"

ID.100.09-16

© 2001 Gensler

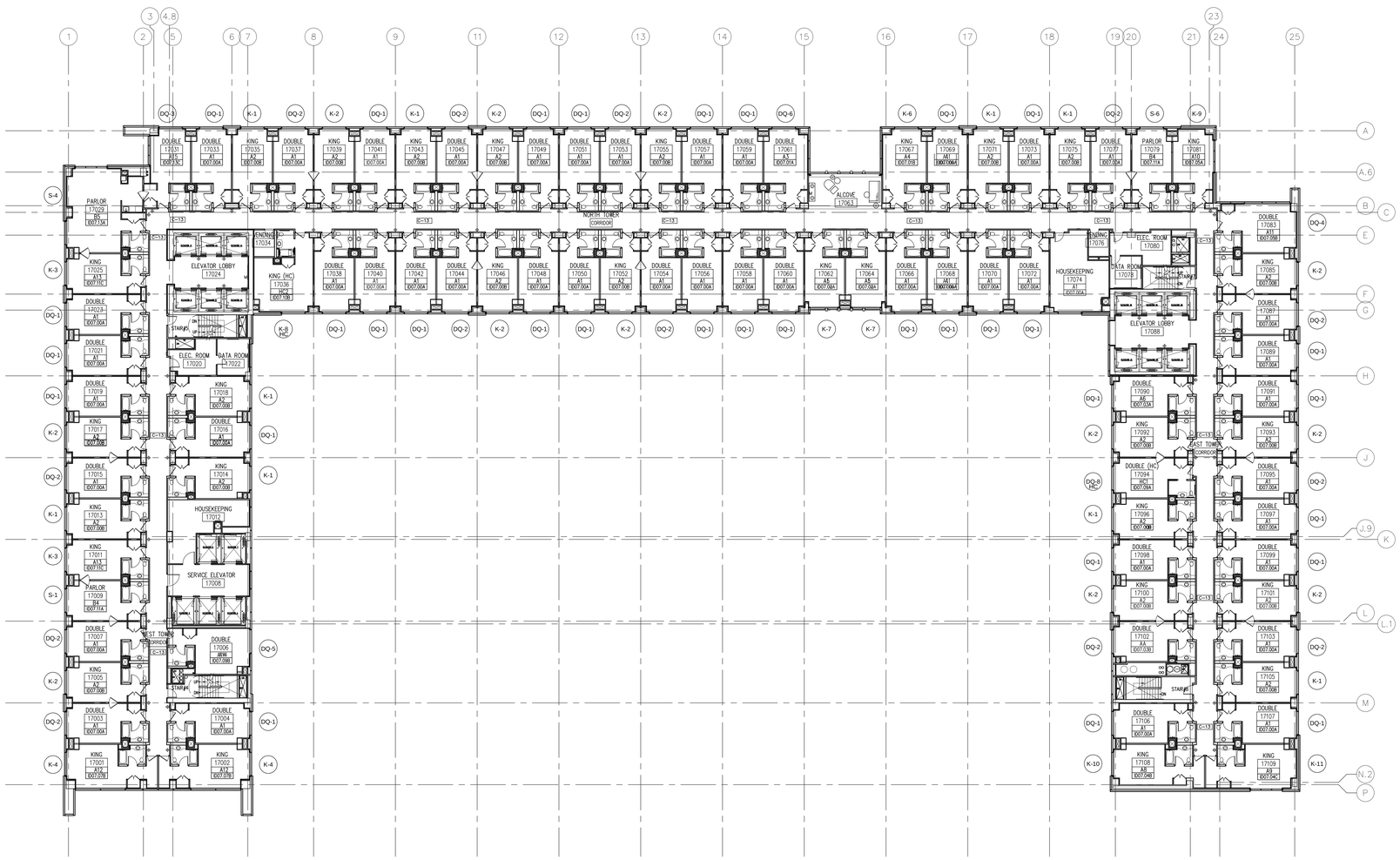

LEVEL-17 ROOM ANALYSIS	
ROOM TYPE	QUANTITY
K-1	9
K-2	12
K-3	2
K-4	2
K-5	0
K-6	1
K-7	2
K-8 HC	1
K-9	1
K-10	1
K-11	1
DQ-1	33
DQ-2	13
DQ-3	1
DQ-4	1
DQ-5	1
DQ-6	1
DQ-7 HC	0
DQ-8 HC	1
S-1	1
S-2	0
S-3	0
S-4	1
S-5	0
S-6	1
S-7	0
S-8	0
S-9	0
S-10	0
S-11	0
TOTAL	86

1 KEY PLAN LEVEL-17
Scale: 1/16"=1'-0"

KEY NOTES

SHEET NOTES

HILTON AMERICAS CONVENTION CENTER HOTEL

OWNER:
HOUSTON CONVENTION CENTER HOTEL CORPORATION
DEVELOPMENT MANAGER:
Two Houston Center
909 Fannin, Suite 3210
Houston TX 77010
Telephone 713.437.6898
Facsimile 713.437.6938

INTERIOR ARCHITECT:
Wilson Associates
Interior Architectural Design
3811 Turtle Creek Blvd.
16th Floor Dallas, Texas
75219 Tel (214) 521-6753
Fax (214) 521-0207

Issue	Date & Issue Description	By	Check
--	--/--/--	--	--

Seal/Signature

REGISTERED INTERIOR DESIGNER CONSTANCE H. GAULSON 1433 STATE OF TEXAS

Constance H. Gaulson 10-18-2018

Project Name
HILTON AMERICAS CONVENTION CENTER HOTEL

Project Number
4993

CAD File Name
ID.100.17.DWG

Description
KEY PLAN - LEVEL 17

Scale
0 2" 4" 8" 16"

ID.100.17

© 2001 Gensler

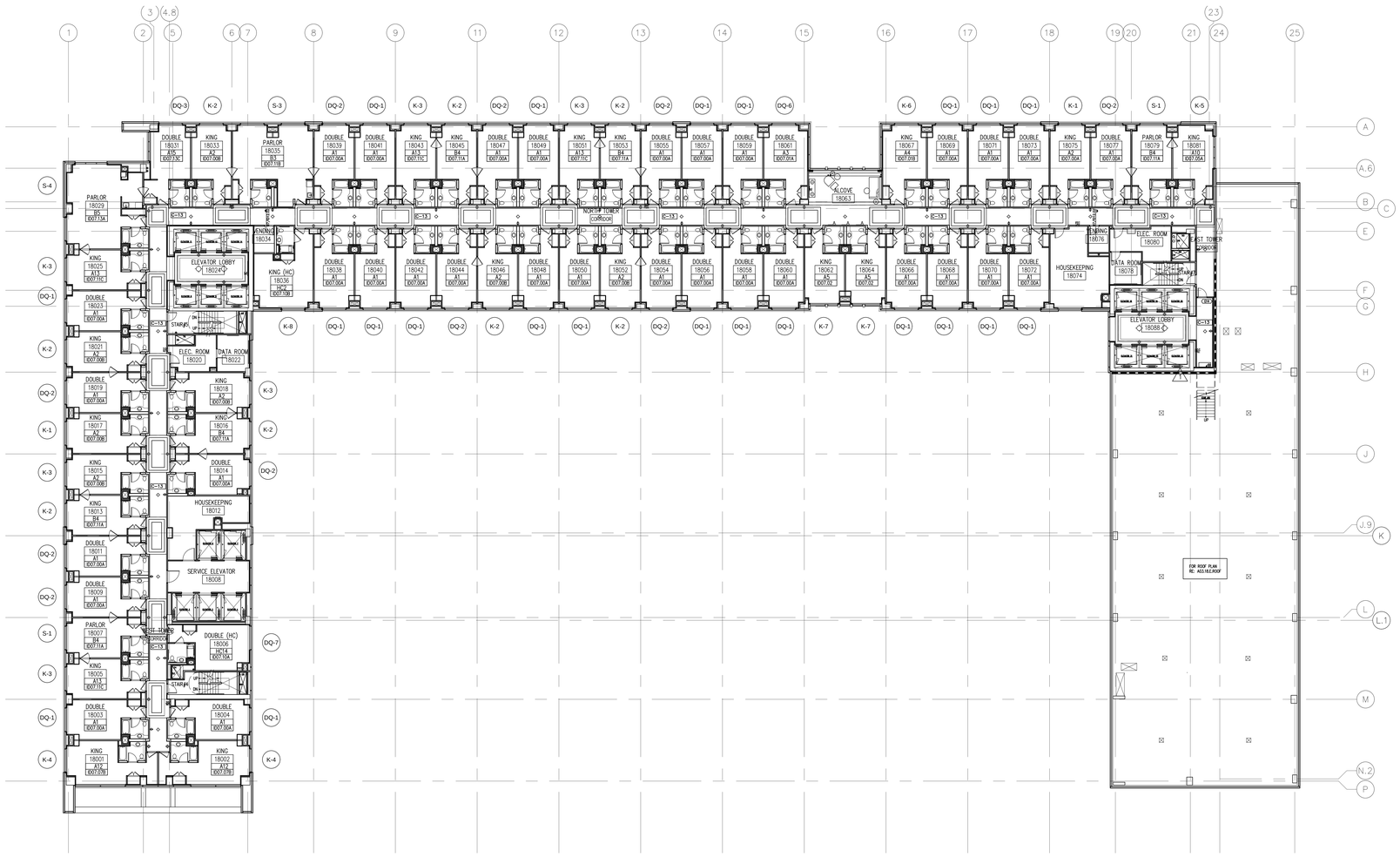

LEVEL-18 ROOM ANALYSIS	
ROOM TYPE	QUANTITY
K-1	2
K-2	8
K-3	6
K-4	2
K-5	1
K-6	1
K-7	2
K-8	1
K-9	0
K-10	0
K-11	0
DQ-1	22
DQ-2	10
DQ-3	1
DQ-4	0
DQ-5	0
DQ-6	1
DQ-7	1
DQ-8	0
S-1	2
S-2	0
S-3	1
S-4	1
S-5	0
S-6	0
S-7	0
S-8	0
S-9	0
S-10	0
S-11	0
TOTAL	62

KEY NOTES

SHEET NOTES

1 KEY PLAN LEVEL–18
Scale: 1/16"=1'–0"

HILTON AMERICAS CONVENTION CENTER HOTEL

OWNER:

HOUSTON CONVENTION CENTER HOTEL CORPORATION

DEVELOPMENT MANAGER:

Two Houston Center
909 Fannin, Suite 3210
Houston TX 77010
Telephone 713.437.6898
Facsimile 713.437.6938

INTERIOR ARCHITECT:

Wilson Associates
Interior Architectural Design

3811 Turtle Creek Blvd.
16th Floor Dallas, Texas
75219 Tel (214) 521-6753
Fax (214) 521-0207

Issue	Date & Issue Description	By	Check
--	-- -- / -- -- / -- --	--	--

Seal/Signature

REGISTERED INTERIOR DESIGNER
CONSTANCE H. JACKSON
1433
STATE OF TEXAS

Constance H. Jackson
10-18-2018

Project Name
HILTON AMERICAS CONVENTION CENTER HOTEL

Project Number
4993

CAD File Name
ID.100.18

Description
KEY PLAN – LEVEL 18

Scale
0 2" 4" 8" 16"

ID.100.18

©2001 Gensler

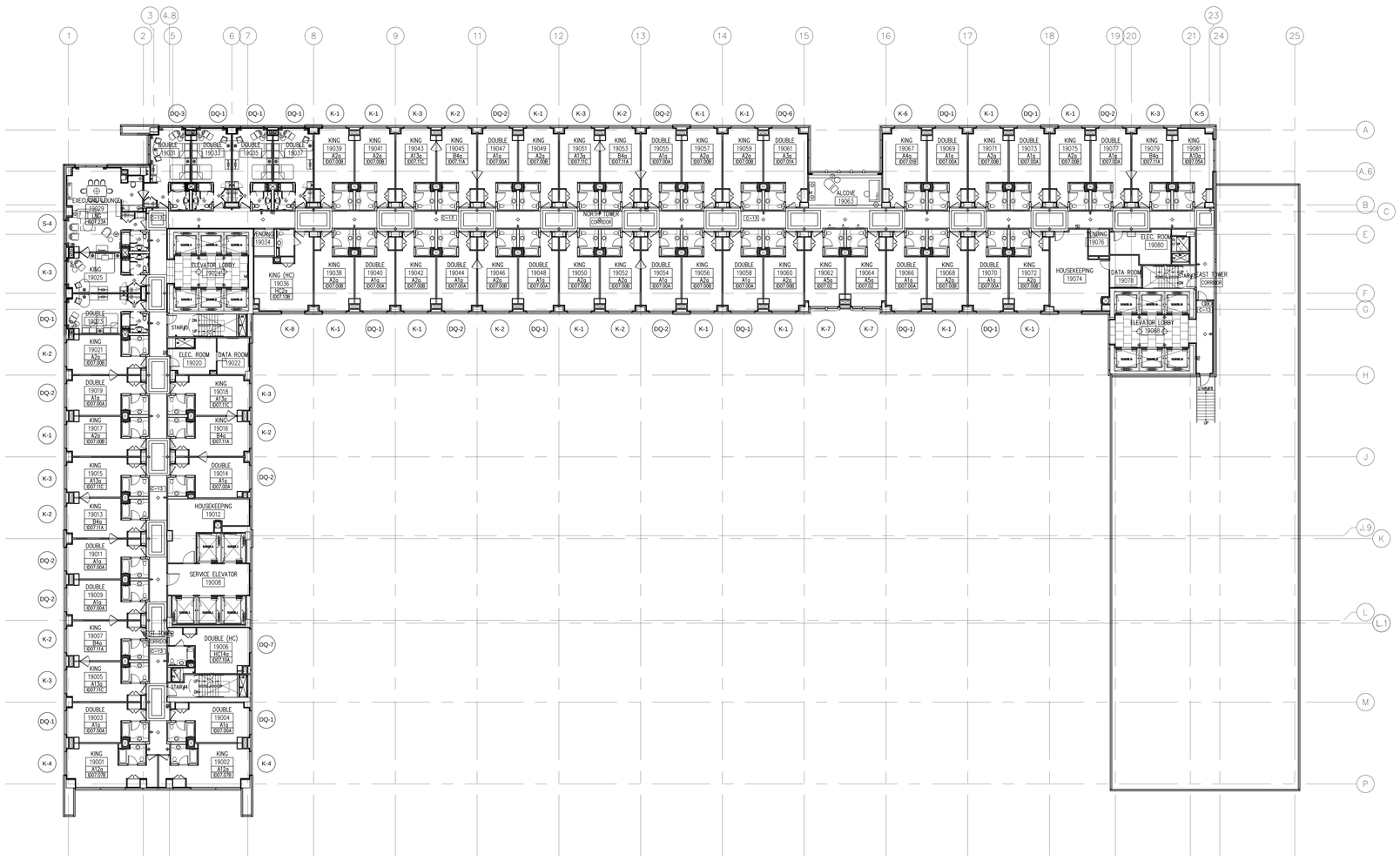

1 KEY PLAN LEVEL–19
Scale: 1/16"=1'–0"

LEVEL-19 ROOM ANALYSIS	
ROOM TYPE	QUANTITY
K-1	15
K-2	8
K-3	7
K-4	2
K-5	1
K-6	1
K-7	2
K-8	1
DQ-1	13
DQ-2	9
DQ-3	1
DQ-4	0
DQ-5	0
DQ-6	1
DQ-7	1
DQ-8	0
S-1	0
S-2	0
S-3	0
S-4	1
S-5	0
S-6	0
S-7	0
S-8	0
S-9	0
S-10	0
S-11	0
TOTAL	63

KEY NOTES

SHEET NOTES

HILTON AMERICAS CONVENTION CENTER HOTEL

OWNER:

HOUSTON CONVENTION CENTER HOTEL CORPORATION

DEVELOPMENT MANAGER:

Two Houston Center
909 Fannin, Suite 3210
Houston TX 77010
Telephone 713.437.6898
Facsimile 713.437.6938

INTERIOR ARCHITECT:

Wilson Associates
Interior Architectural Design

3811 Turtle Creek Blvd.
16th Floor Dallas, Texas
75219 Tel (214) 521-6753
Fax (214) 521-0207

Issue	Date & Issue Description	By	Check
--	-- -- / -- -- / -- --	--	--

Seal/Signature

REGISTERED INTERIOR DESIGNER
CONSTANCE H. GAULSON
1433
STATE OF TEXAS

Constance H. Gaulson 10-18-2018

Project Name
HILTON AMERICAS CONVENTION CENTER HOTEL

Project Number
4993

CAD File Name
ID.100.19

Description
KEY PLAN – LEVELS 19

Scale
0 2" 4" 8" 16"

ID.100.19

© 2001 Gensler

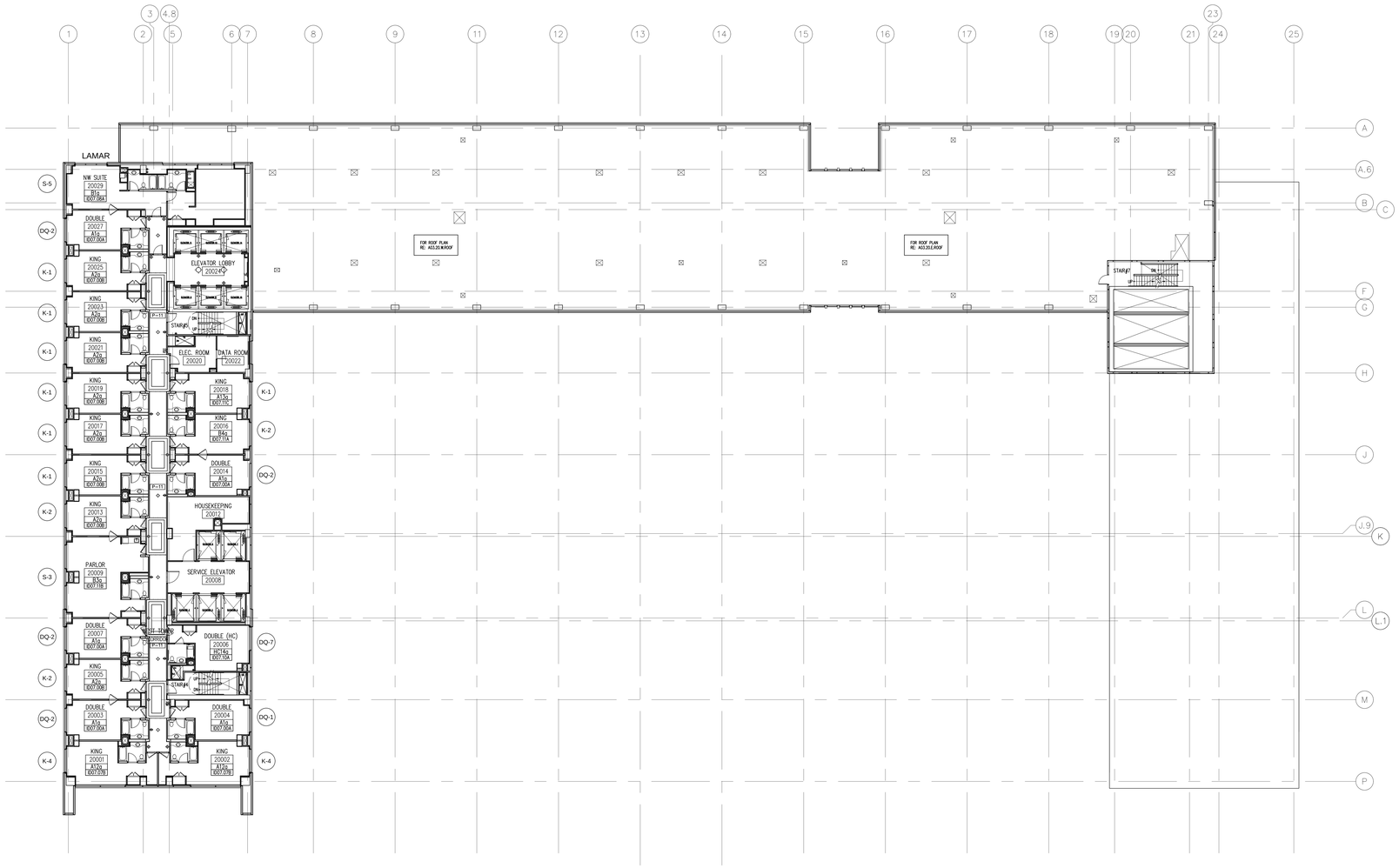

1 KEY PLAN LEVEL-20
Scale: 1/16"=1'-0"

LEVEL-20 ROOM ANALYSIS	
ROOM TYPE	QUANTITY
K-1	7
K-2	3
K-3	0
K-4	2
K-5	0
K-6	0
K-7	0
K-8	0
DQ-1	1
DQ-2	4
DQ-3	0
DQ-4	0
DQ-5	0
DQ-6	0
DQ-7	1
DQ-8	0
S-1	0
S-2	0
S-3	1
S-4	0
S-5	1
S-6	0
S-7	0
S-8	0
S-9	0
S-10	0
S-11	0
TOTAL	20

KEY NOTES

SHEET NOTES

HILTON AMERICAS CONVENTION CENTER HOTEL

OWNER:
HOUSTON CONVENTION CENTER HOTEL CORPORATION
DEVELOPMENT MANAGER:

Two Houston Center
909 Fannin, Suite 3210
Houston TX 77010
Telephone 713.437.6898
Facsimile 713.437.6938

INTERIOR ARCHITECT:
Wilson Associates
Interior Architectural Design

3811 Turtle Creek Blvd.
16th Floor Dallas, Texas
75219 Tel (214) 521-6753
Fax (214) 521-0207

Issue	Date & Issue Description	By	Check
--	--/--/--	--	--

Seal/Signature

REGISTERED INTERIOR DESIGNER CONSTANCE H. JACKSON 1433 STATE OF TEXAS

Constance H. Jackson 10-18-2018

Project Name
HILTON AMERICAS CONVENTION CENTER HOTEL

Project Number
4993

CAD File Name
ID.100.20.DWG

Description
KEY PLAN - LEVELS 20

Scale
0 2" 4" 8" 16"

ID.100.20

©2001 Gensler

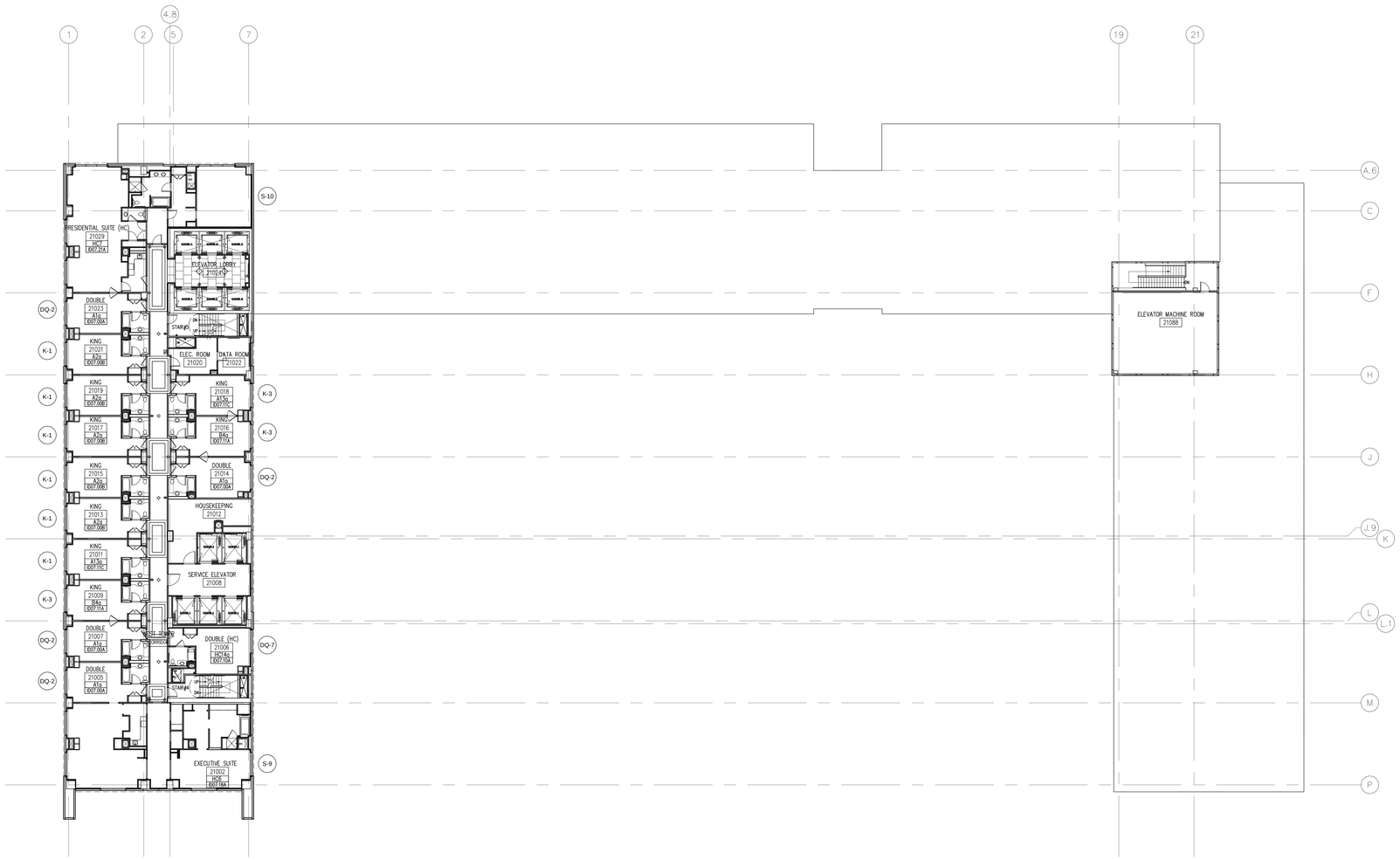

1 KEY PLAN LEVEL-21
Scale: 1/16"=1'-0"

LEVEL-21 ROOM ANALYSIS	
ROOM TYPE	QUANTITY
K-1	6
K-2	0
K-3	3
K-4	0
K-5	0
K-6	0
K-7	0
K-8	0
K-9	0
K-10	0
K-11	0
DQ-1	0
DQ-2	4
DQ-3	0
DQ-4	0
DQ-5	0
DQ-6	0
DQ-7	1
DQ-8	0
S-1	0
S-2	0
S-3	0
S-4	0
S-5	0
S-6	0
S-7	0
S-8	0
S-9	1
S-10	1
S-11	0
TOTAL	16

KEY NOTES

SHEET NOTES

HILTON AMERICAS CONVENTION CENTER HOTEL

OWNER:
HOUSTON CONVENTION CENTER HOTEL CORPORATION
Two Houston Center
909 Fannin, Suite 3210
Houston TX 77010
Telephone 713.437.6898
Facsimile 713.437.6938

DEVELOPMENT MANAGER:

INTERIOR ARCHITECT:
Wilson Associates
Interior Architectural Design
3811 Turtle Creek Blvd.
16th Floor Dallas, Texas
75219 Tel (214) 521-6753
Fax (214) 521-0207

Issue	Date & Issue Description	By	Check
--	-- -- / -- -- / -- --	-- --	-- --

Seal/Signature

REGISTERED INTERIOR DESIGNER
CONSTANCE H. JACKSON
1433
STATE OF TEXAS

Constance H. Jackson 10-18-2018

Project Name
HILTON AMERICAS CONVENTION CENTER HOTEL

Project Number
4993

CAD File Name
ID.100.21

Description
KEY PLAN – LEVELS 21

Scale
0 2" 4" 8" 16"

ID.100.21

©2001 Gensler

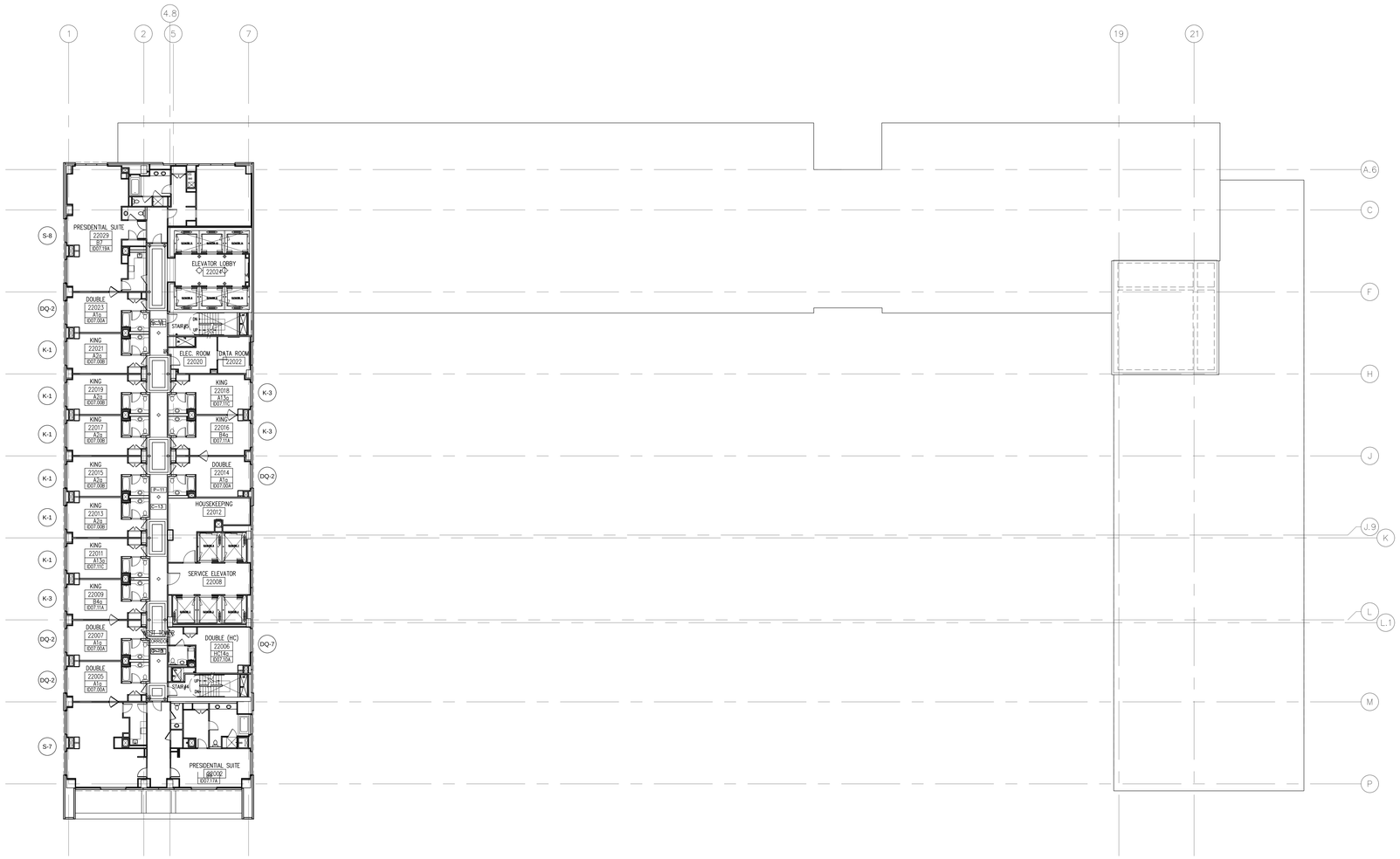

1 KEY PLAN LEVEL–22
Scale: 1/16"=1'–0"

LEVEL-22 ROOM ANALYSIS	
ROOM TYPE	QUANTITY
K-1	6
K-2	0
K-3	3
K-4	0
K-5	0
K-6	0
K-7	0
K-8	0
K-9	0
K-10	0
K-11	0
DQ-1	0
DQ-2	4
DQ-3	0
DQ-4	0
DQ-5	0
DQ-6	0
DQ-7	1
DQ-8	0
S-1	0
S-2	0
S-3	0
S-4	0
S-5	0
S-6	0
S-7	1
S-8	1
S-9	0
S-10	0
S-11	0
TOTAL	16

KEY NOTES

SHEET NOTES

HILTON AMERICAS CONVENTION CENTER HOTEL

OWNER:
HOUSTON CONVENTION CENTER HOTEL CORPORATION
Two Houston Center
909 Fannin, Suite 3210
Houston TX 77010
Telephone 713.437.6898
Facsimile 713.437.6938

DEVELOPMENT MANAGER:

INTERIOR ARCHITECT:
Wilson Associates
Interior Architectural Design
3811 Turtle Creek Blvd.
16th Floor Dallas, Texas
75219 Tel (214) 521-6753
Fax (214) 521-0207

Issue	Date & Issue Description	By	Check
--	-- -- / -- -- / -- --	-- --	-- --

Seal/Signature

REGISTERED INTERIOR DESIGNER CONSTANCE H. JACKSON 1433 STATE OF TEXAS
Constance H. Jackson 10-18-2018

Project Name
HILTON AMERICAS CONVENTION CENTER HOTEL

Project Number
4993

CAD File Name
ID.100.22

Description
KEY PLAN – LEVELS 22

Scale
0 2" 4" 8" 16"

ID.100.22

©2001 Gensler

ROOM MATRIX

ROOM MATRIX TABLE W/MODEL ROOMS

FLOOR LEVEL \ ROOM TYPE	K1	K2	K3	K4	K5	K6	K7	K8	K9	K10	K11	DQ1	DQ2	DQ3	DQ4	DQ5	DQ6	DQ7	DQ8	S1	S2	S3	S4	S5	S6	S7	S8	S9	S10	S11	TOLAT
LEVEL 6	11	12	3	2	1	0	0	1	0	1	1	37	13	1	1	0	0	1	1	0	1	0	0	0	0	0	0	0	0	1	88
LEVEL 7	11	14	1	2	1	0	0	1	0	1	1	30	13	1	1	0	0	1	1	0	0	4	1	0	0	0	0	0	0	0	84
LEVEL 8	8	13	3	2	1	1	2	1	0	1	1	29	14	1	1	1	1	0	1	0	0	2	1	0	0	0	0	0	0	0	84
LEVEL 9	7	15	3	2	1	1	2	1	0	1	1	30	16	1	1	1	1	0	1	0	0	0	1	0	0	0	0	0	0	0	86
LEVEL 10	7	15	3	2	1	1	2	1	0	1	1	30	16	1	1	1	1	0	1	0	0	0	1	0	0	0	0	0	0	0	86
LEVEL 11	7	15	3	2	1	1	2	1	0	1	1	30	16	1	1	1	1	0	1	0	0	0	1	0	0	0	0	0	0	0	86
LEVEL 12	7	15	3	2	1	1	2	1	0	1	1	30	16	1	1	1	1	0	1	0	0	0	1	0	0	0	0	0	0	0	86
LEVEL 13	7	15	3	2	1	1	2	1	0	1	1	30	16	1	1	1	1	0	1	0	0	0	1	0	0	0	0	0	0	0	86
LEVEL 14	7	15	3	2	1	1	2	1	0	1	1	30	16	1	1	1	1	0	1	0	0	0	1	0	0	0	0	0	0	0	86
LEVEL 15	7	15	3	2	1	1	2	1	0	1	1	30	16	1	1	1	1	0	1	0	0	0	1	0	0	0	0	0	0	0	86
LEVEL 16	7	15	3	2	1	1	2	1	0	1	1	30	16	1	1	1	1	0	1	1	0	0	1	0	1	0	0	0	0	0	86
LEVEL 17	9	12	2	2	0	1	2	1	1	1	1	33	13	1	1	1	1	0	1	1	0	0	1	0	1	0	0	0	0	0	86
LEVEL 18	2	8	6	2	1	1	2	1	0	0	0	22	10	1	0	0	1	1	0	2	0	1	1	0	0	0	0	0	0	0	62
LEVEL 19	15	8	7	2	1	1	2	1	0	0	0	13	9	1	0	0	1	1	0	0	0	0	1	0	0	0	0	0	0	0	63
LEVEL 20	7	3	0	2	0	0	0	0	0	0	0	1	4	0	0	0	0	1	0	0	0	1	0	1	0	0	0	0	0	0	20
LEVEL 21	6	0	3	0	0	0	0	0	0	0	0	0	4	0	0	0	0	1	0	0	0	0	0	0	0	0	0	1	1	0	16
LEVEL 22	6	0	3	0	0	0	0	0	0	0	0	0	4	0	0	0	0	1	0	0	0	0	0	0	0	1	1	0	0	0	16
TOTAL	131	190	52	30	13	12	24	14	1	12	12	405	212	14	12	10	12	7	12	3	1	8	13	1	1	1	1	1	1	1	1207
	491											684								27						5					

ROOM MATRIX TABLE W/O MODEL ROOMS

FLOOR LEVEL \ ROOM TYPE	K1	K2	K3	K4	K5	K6	K7	K8	K9	K10	K11	DQ1	DQ2	DQ3	DQ4	DQ5	DQ6	DQ7	DQ8	S1	S2	S3	S4	S5	S6	S7	S8	S9	S10	S11	TOLAT
LEVEL 6	11	12	3	2	1	0	0	1	0	1	1	37	13	1	1	0	0	1	1	0	1	0	0	0	0	0	0	0	0	1	88
LEVEL 7	11	14	1	2	1	0	0	1	0	1	1	30	13	1	1	0	0	1	1	0	0	4	1	0	0	0	0	0	0	0	84
LEVEL 8	8	13	3	2	1	1	2	1	0	1	1	29	14	1	1	1	1	0	1	0	0	2	1	0	0	0	0	0	0	0	84
LEVEL 9	7	15	3	2	1	1	2	1	0	1	1	30	16	1	1	1	1	0	1	0	0	0	1	0	0	0	0	0	0	0	86
LEVEL 10	7	15	3	2	1	1	2	1	0	1	1	30	16	1	1	1	1	0	1	0	0	0	1	0	0	0	0	0	0	0	86
LEVEL 11	7	15	3	2	1	1	2	1	0	1	1	30	16	1	1	1	1	0	1	0	0	0	1	0	0	0	0	0	0	0	86
LEVEL 12	7	15	3	2	1	1	2	1	0	1	1	30	16	1	1	1	1	0	1	0	0	0	1	0	0	0	0	0	0	0	86
LEVEL 13	7	15	3	2	1	1	2	1	0	1	1	30	16	1	1	1	1	0	1	0	0	0	1	0	0	0	0	0	0	0	86
LEVEL 14	7	15	3	2	1	1	2	1	0	1	1	30	16	1	1	1	1	0	1	0	0	0	1	0	0	0	0	0	0	0	86
LEVEL 15	7	15	3	2	1	1	2	1	0	1	1	30	16	1	1	1	1	0	1	0	0	0	1	0	0	0	0	0	0	0	86
LEVEL 16	7	15	3	2	1	1	2	1	0	1	1	30	16	1	1	1	1	0	1	0	0	0	1	0	0	0	0	0	0	0	86
LEVEL 17	9	12	2	2	0	1	2	1	1	1	1	33	13	1	1	1	1	0	1	1	0	0	1	0	1	0	0	0	0	0	86
LEVEL 18	2	8	6	2	1	1	2	1	0	0	0	22	10	1	0	0	1	1	0	2	0	1	1	0	0	0	0	0	0	0	62
LEVEL 19	15	8	6	2	1	1	2	1	0	0	0	9	9	0	0	0	1	1	0	0	0	0	0	0	0	0	0	0	0	0	56
LEVEL 20	7	3	0	2	0	0	0	0	0	0	0	1	4	0	0	0	0	1	0	0	0	1	0	1	0	0	0	0	0	0	20
LEVEL 21	6	0	3	0	0	0	0	0	0	0	0	0	4	0	0	0	0	1	0	0	0	0	0	0	0	0	0	1	1	0	16
LEVEL 22	6	0	3	0	0	0	0	0	0	0	0	0	4	0	0	0	0	1	0	0	0	0	0	0	0	1	1	0	0	0	16
TOTAL	131	190	51	30	13	12	24	14	1	12	12	401	212	13	12	10	12	7	12	3	1	8	12	1	1	1	1	1	1	1	1200
	490											679								26						5					

KEY NOTES

SHEET NOTES

HILTON AMERICAS CONVENTION CENTER HOTEL

OWNER:

HOUSTON CONVENTION CENTER HOTEL CORPORATION

DEVELOPMENT MANAGER:

Two Houston Center
909 Fannin, Suite 3210
Houston TX 77010
Telephone 713.437.6898
Facsimile 713.437.6938

INTERIOR ARCHITECT:

Wilson Associates
Interior Architectural Design

3811 Turtle Creek Blvd.
16th Floor Dallas, Texas
75219 Tel (214) 521-6753
Fax (214) 521-0207

Issue	Date & Issue Description	By	Check
-- --	-- -- / -- -- / -- --	-- --	-- --

Seal/Signature

REGISTERED INTERIOR DESIGNER
CONSTANCE H. JACKSON
1433
STATE OF TEXAS

Constance H. Jackson

Project Name 10-18-2018

HILTON AMERICAS CONVENTION CENTER HOTEL

Project Number

4993

CAD File Name

ID.150.DWG

Description

ROOM MATRIX

Scale

0 2" 4" 8" 16"

ID.150

©2001 Gensler

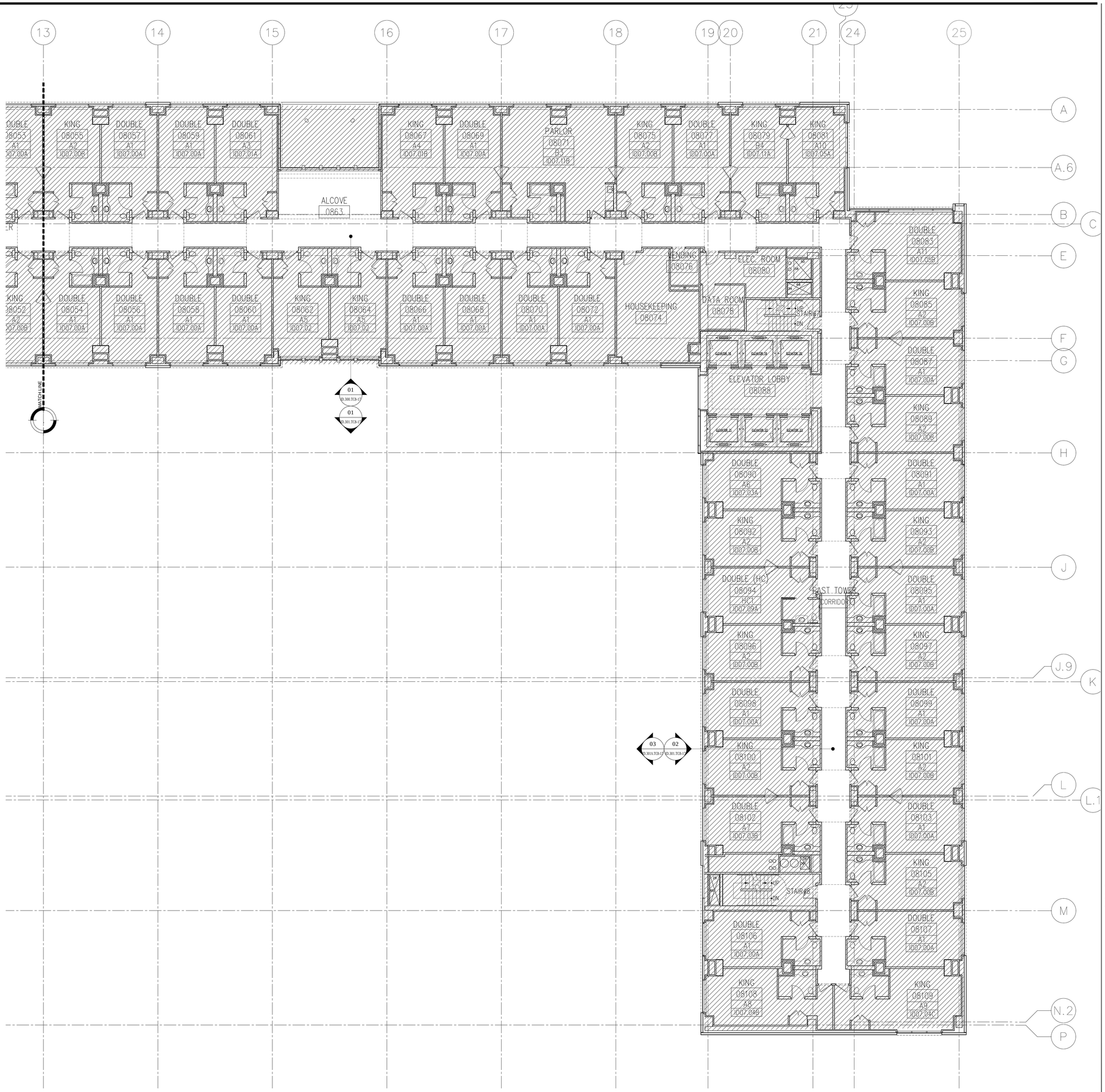

1 TYPICAL CORRIDOR FLOOR PLAN LEVEL 8–17
Scale: 1/8"=1'-0"

KEY NOTES

SHEET NOTES

HILTON AMERICAS CONVENTION CENTER HOTEL

OWNER:
HOUSTON CONVENTION CENTER HOTEL CORPORATION
Two Houston Center
909 Fannin, Suite 3210
Houston TX 77010
Telephone 713.437.6898
Facsimile 713.437.6938

DEVELOPMENT MANAGER:

INTERIOR ARCHITECT:
Wilson Associates
Interior Architectural Design
3811 Turtle Creek Blvd.
16th Floor Dallas, Texas
75219 Tel (214) 521-6753
Fax (214) 521-0207

Issue	Date & Issue Description	By	Check
--	-- -- / -- -- / -- --	--	--

Seal/Signature

REGISTERED INTERIOR DESIGNER CONSTANCE H. JACKSON 1433 STATE OF TEXAS

10-18-2018

Project Name
HILTON AMERICAS CONVENTION CENTER HOTEL

Project Number
4993

CAD File Name
ID.200.TC–01.E~04.E.DWG

Description
TYPICAL CORRIDOR – LEVELS 8 – 17 – FLOOR PLAN

Scale
0 2" 4" 8" 16"

ID.200.TC-01.E

©2001 Gensler

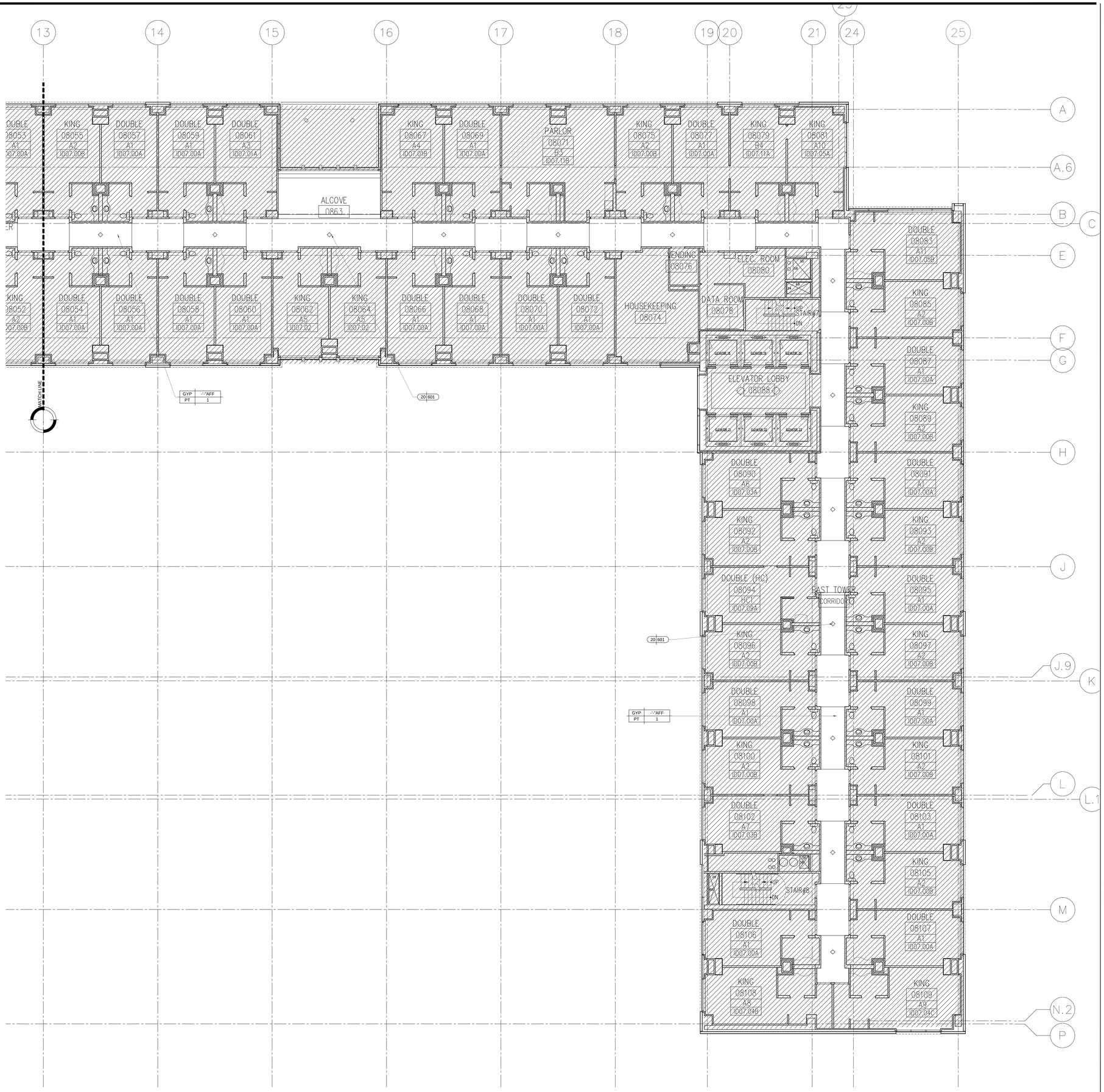

1 TYPICAL CORRIDOR REFLECTED CEILING PLAN LEVEL 8–17
Scale: 1/8"=1'–0"

KEY NOTES

SHEET NOTES

HILTON AMERICAS CONVENTION CENTER HOTEL

OWNER:
HOUSTON CONVENTION CENTER HOTEL CORPORATION
DEVELOPMENT MANAGER:

Two Houston Center
909 Fannin, Suite 3210
Houston TX 77010
Telephone 713.437.6898
Facsimile 713.437.6938

INTERIOR ARCHITECT:
Wilson Associates
Interior Architectural Design

3811 Turtle Creek Blvd.
16th Floor Dallas, Texas
75219 Tel (214) 521-6753
Fax (214) 521-0207

Issue	Date & Issue Description	By	Check
--	-- / -- / --	--	--

Seal/Signature

REGISTERED INTERIOR DESIGNER CONSTANCE H. JACKSON 1433 STATE OF TEXAS

Constance H. Jackson 10-18-2018

Project Name
HILTON AMERICAS CONVENTION CENTER HOTEL

Project Number
4993

CAD File Name
ID.200.TC–01.E~04.E.DWG

Description
TYPICAL CORRIDOR –
LEVELS 8 – 17 – REFLECTED CEILING PLAN

Scale
0 2" 4" 8" 16"

ID.200.TC-02.E

©2001 Gensler

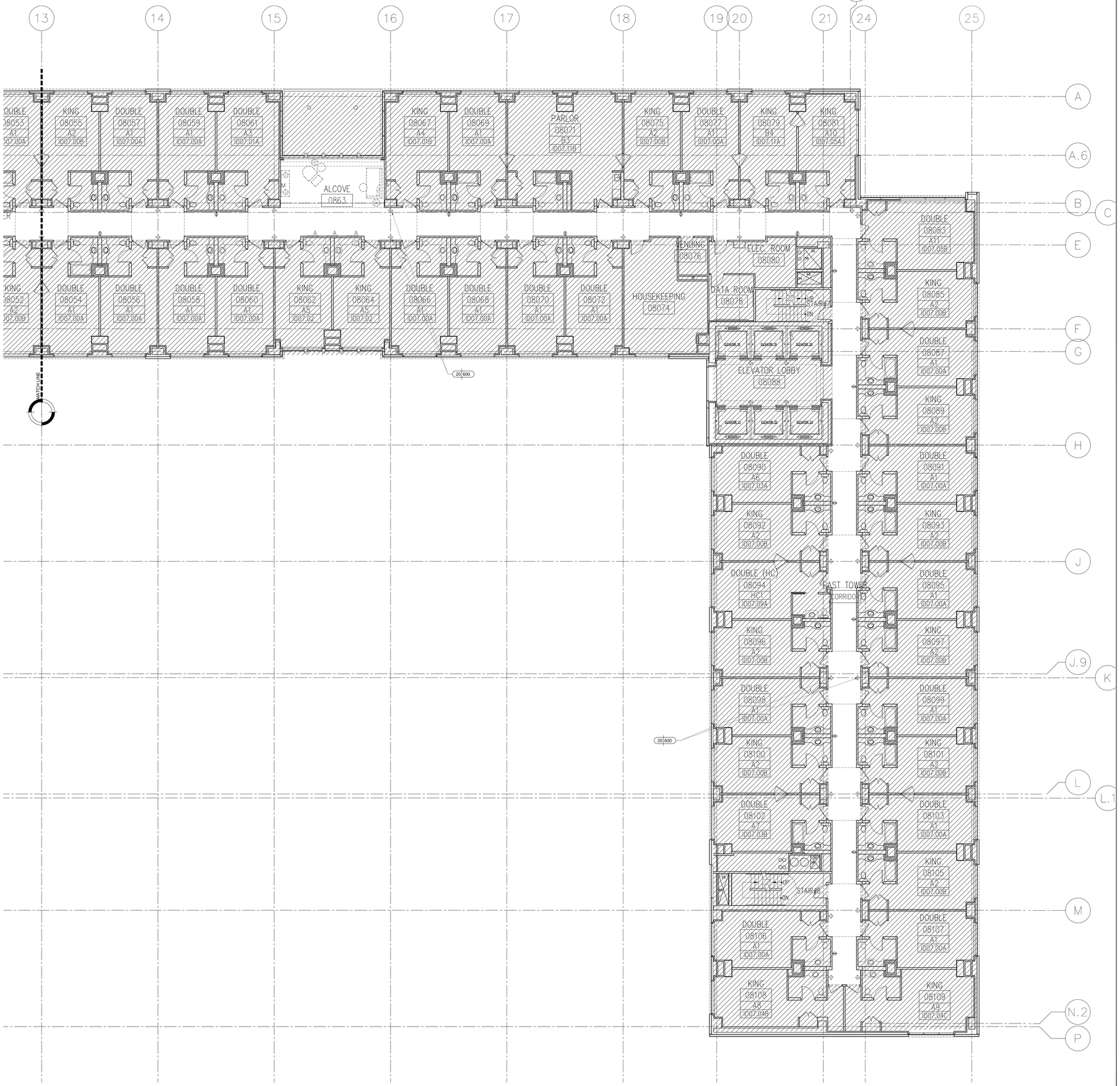

1 TYPICAL CORRIDOR ELECTRICAL PLAN LEVEL 8–17
Scale: 1/8"=1'–0"

KEY NOTES

SHEET NOTES

HILTON AMERICAS CONVENTION CENTER HOTEL

OWNER:
HOUSTON CONVENTION CENTER HOTEL CORPORATION
Two Houston Center
909 Fannin, Suite 3210
Houston TX 77010
Telephone 713.437.6898
Facsimile 713.437.6938

DEVELOPMENT MANAGER:

INTERIOR ARCHITECT:
Wilson Associates
Interior Architectural Design
3811 Turtle Creek Blvd.
16th Floor Dallas, Texas
75219 Tel (214) 521-6753
Fax (214) 521-0207

Issue	Date & Issue Description	By	Check
-- --	-- -- / -- -- / -- --	-- --	-- --

Seal/Signature

REGISTERED INTERIOR DESIGNER CONSTANCE H. JACKSON 1433 STATE OF TEXAS

Constance H. Jackson 10-18-2018

Project Name
HILTON AMERICAS CONVENTION CENTER HOTEL

Project Number
4993

CAD File Name
ID.200.TC–01.E–04.E.DWG

Description
TYPICAL CORRIDOR – LEVELS 8 – 17 – ELECTRICAL PLAN

Scale
0 2" 4" 8" 16"

ID.200.TC-03.E

©2001 Gensler

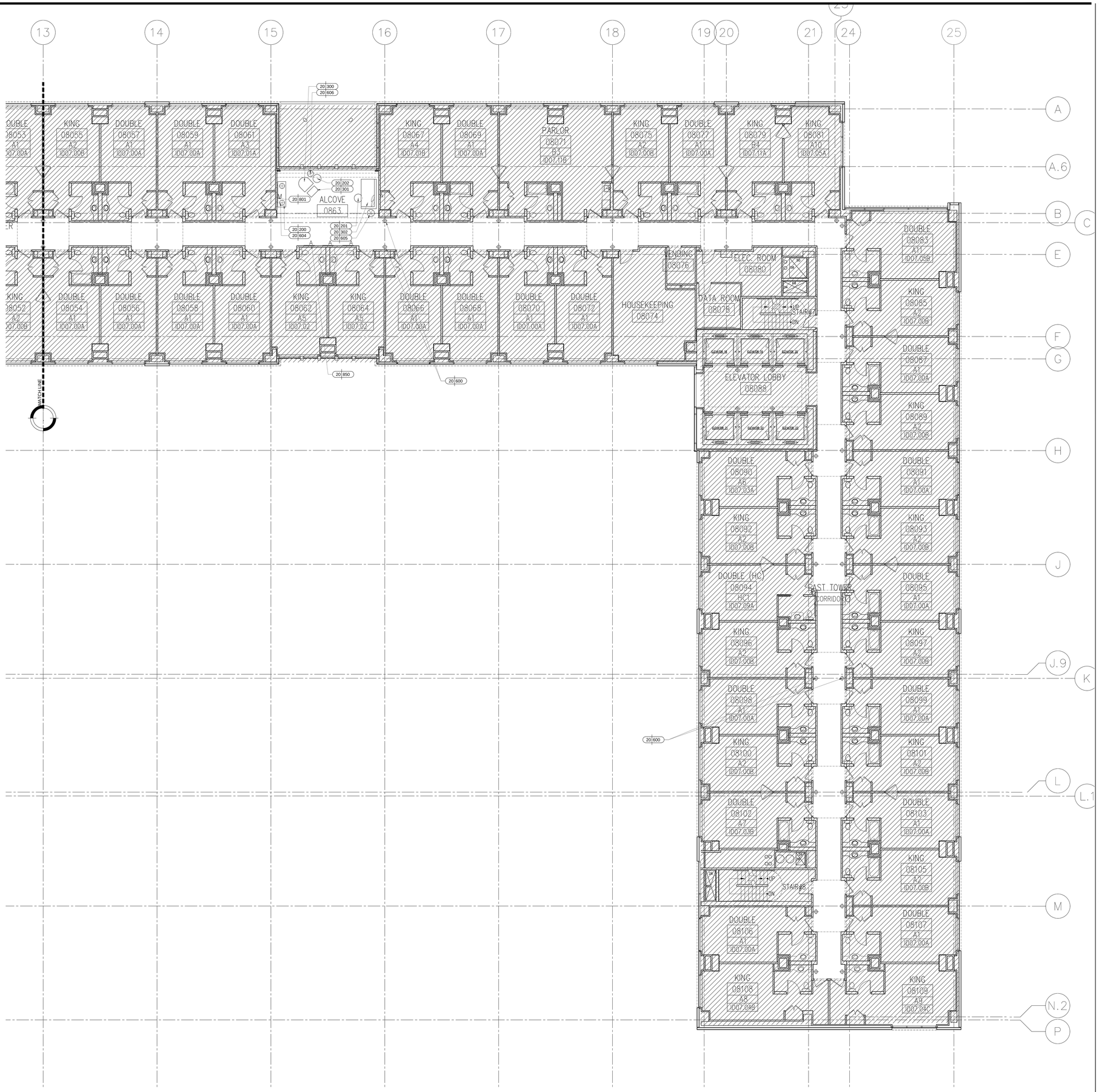

1 TYPICAL CORRIDOR FURNISHING PLAN LEVEL 8–17
Scale: 1/8"=1'–0"

KEY NOTES

SHEET NOTES

HILTON AMERICAS CONVENTION CENTER HOTEL

OWNER:
HOUSTON CONVENTION CENTER HOTEL CORPORATION
DEVELOPMENT MANAGER:

Two Houston Center
909 Fannin, Suite 3210
Houston TX 77010
Telephone 713.437.6898
Facsimile 713.437.6938

INTERIOR ARCHITECT:
Wilson Associates
Interior Architectural Design

3811 Turtle Creek Blvd.
16th Floor Dallas, Texas
75219 Tel (214) 521-6753
Fax (214) 521-0207

Issue	Date & Issue Description	By	Check
--	-- -- / -- -- / -- --	--	--

Seal/Signature

REGISTERED INTERIOR DESIGNER CONSTANCE H. JACKSON 1433 STATE OF TEXAS

Constance H. Jackson 10-18-2018

Project Name
HILTON AMERICAS CONVENTION CENTER HOTEL

Project Number
4993

CAD File Name
ID.200.TC–01.E~04.E.DWG

Description
TYPICAL CORRIDOR – LEVELS 8 – 17 – FURNISHING PLAN

Scale
0 2" 4" 8" 16"

ID.200.TC-04.E

©2001 Gensler

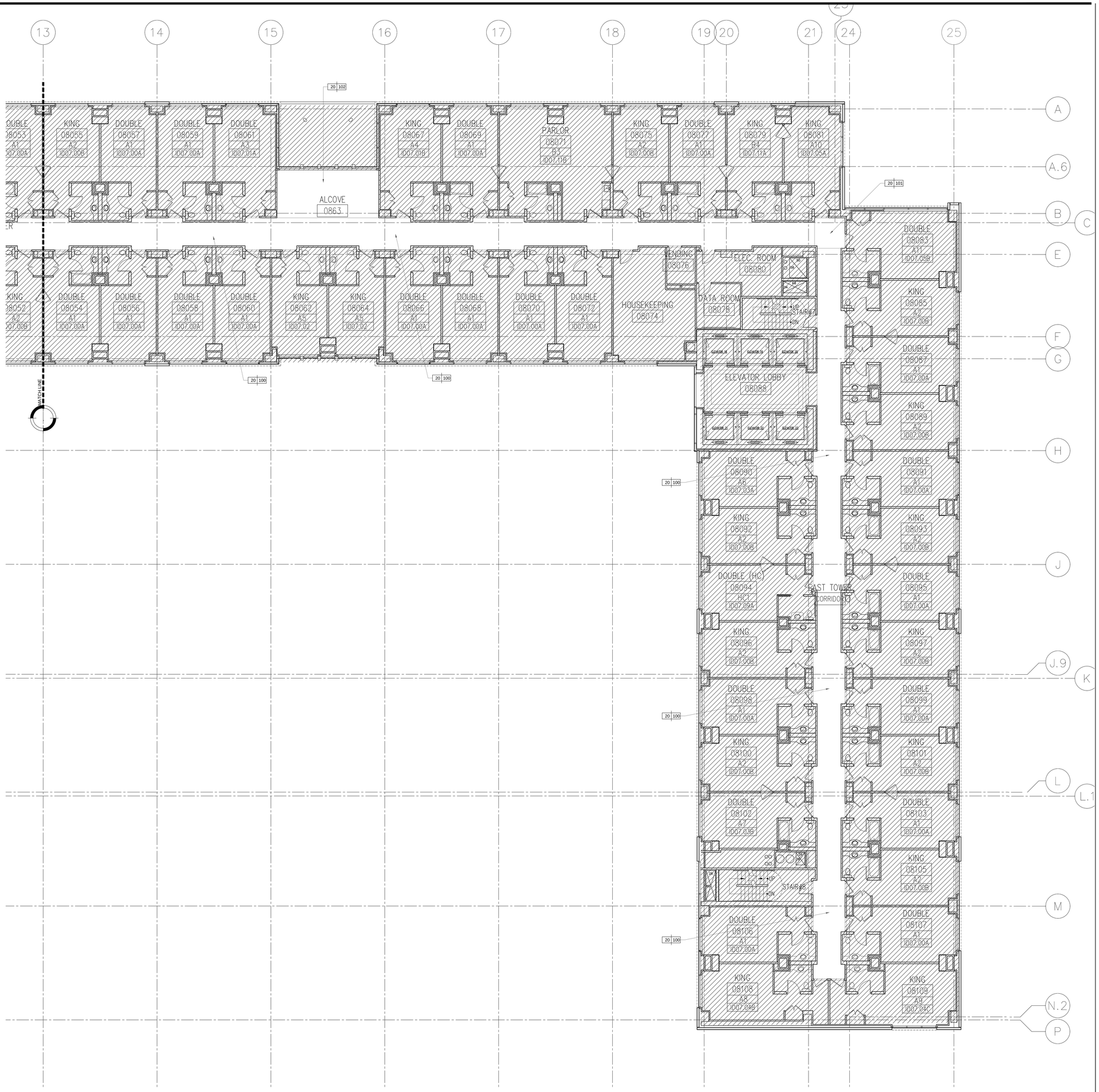

1 TYPICAL CORRIDOR FLOOR FINISH PLAN LEVEL 8–17
Scale: 1/8"=1'–0"

KEY NOTES

SHEET NOTES

HILTON AMERICAS CONVENTION CENTER HOTEL

OWNER:
HOUSTON CONVENTION CENTER HOTEL CORPORATION
Two Houston Center
909 Fannin, Suite 3210
Houston TX 77010
Telephone 713.437.6898
Facsimile 713.437.6938

DEVELOPMENT MANAGER:

INTERIOR ARCHITECT:
Wilson Associates
Interior Architectural Design
3811 Turtle Creek Blvd.
16th Floor Dallas, Texas
75219 Tel (214) 521-6753
Fax (214) 521-0207

Issue	Date & Issue Description	By	Check
--	-- -- / -- -- / -- --	--	--

Seal/Signature

REGISTERED INTERIOR DESIGNER CONSTANCE H. JACKSON 1433 STATE OF TEXAS

Constance H. Jackson 10-18-2018

Project Name
HILTON AMERICAS CONVENTION CENTER HOTEL

Project Number
4993

CAD File Name
ID.200.TC–01.E~04.E.DWG

Description
TYPICAL CORRIDOR – LEVELS 8 – 17 – FLOOR FINISH PLAN

Scale
0 2" 4" 8" 16"

ID.200.TC-05.E

©2001 Gensler

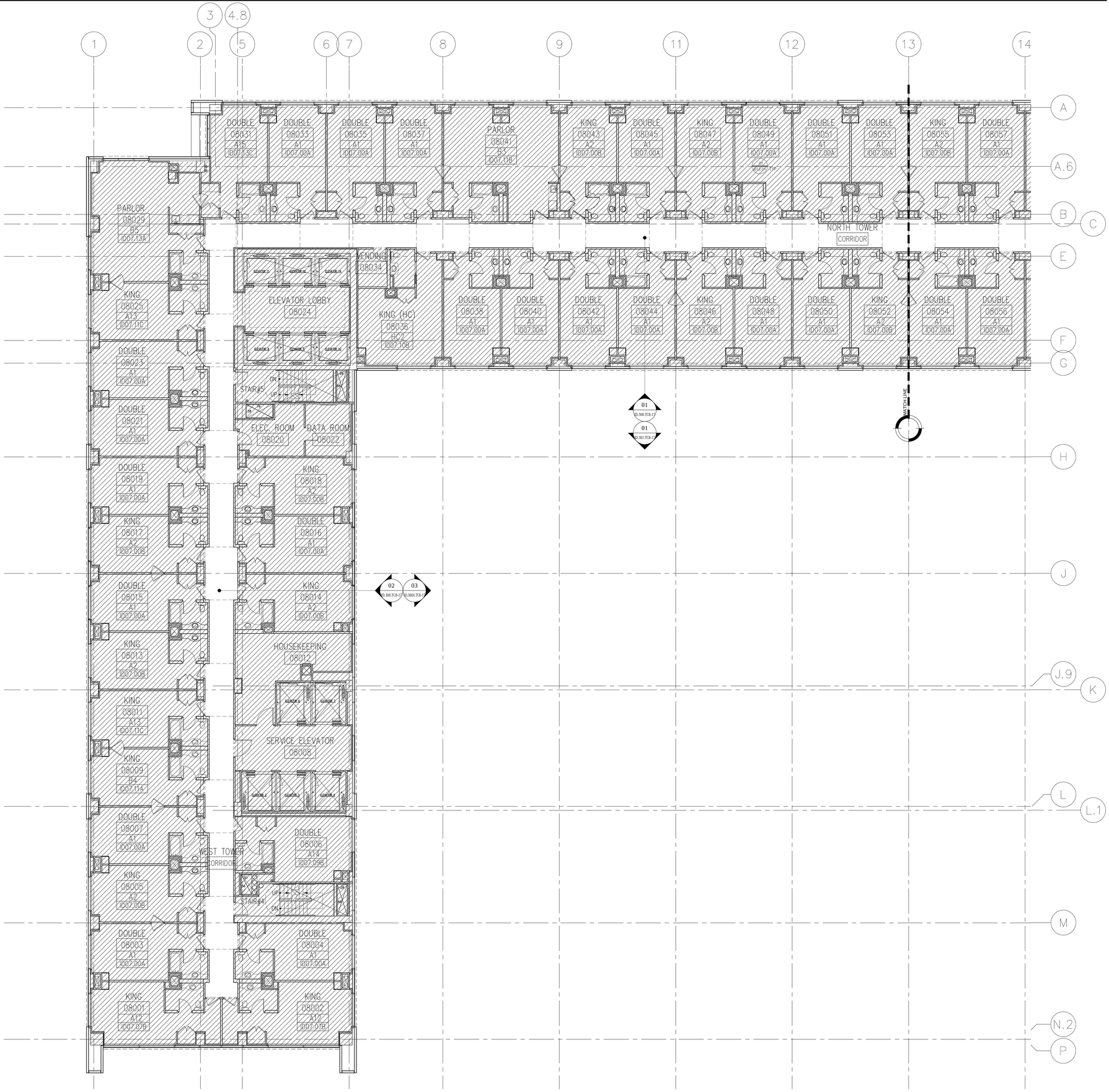

1 TYPICAL CORRIDOR FLOOR PLAN LEVEL 8–17
Scale: 1/8"=1'–0"

KEY NOTES

SHEET NOTES

HILTON AMERICAS CONVENTION CENTER HOTEL

OWNER:
HOUSTON CONVENTION CENTER HOTEL CORPORATION
DEVELOPMENT MANAGER:

Two Houston Center
909 Fannin, Suite 3210
Houston TX 77010
Telephone 713.437.6898
Facsimile 713.437.6938

INTERIOR ARCHITECT:
Wilson Associates
Interior Architectural Design

3811 Turtle Creek Blvd.
16th Floor Dallas, Texas
75219 Tel (214) 521-6753
Fax (214) 521-0207

Issue	Date & Issue Description	By	Check
--	-- -- / -- / -- --	--	--

Seal/Signature

REGISTERED INTERIOR DESIGNER CONSTANCE H. GAULKSON 1433 STATE OF TEXAS

10-18-2018

Project Name
HILTON AMERICAS CONVENTION CENTER HOTEL

Project Number
4993

CAD File Name
ID.200.TC–01.W–04.W.DWG

Description
TYPICAL CORRIDOR – LEVELS 8 – 17 – FLOOR PLAN

Scale
0 2" 4" 8" 16"

ID.200.TC-01.W

©2001 Gensler

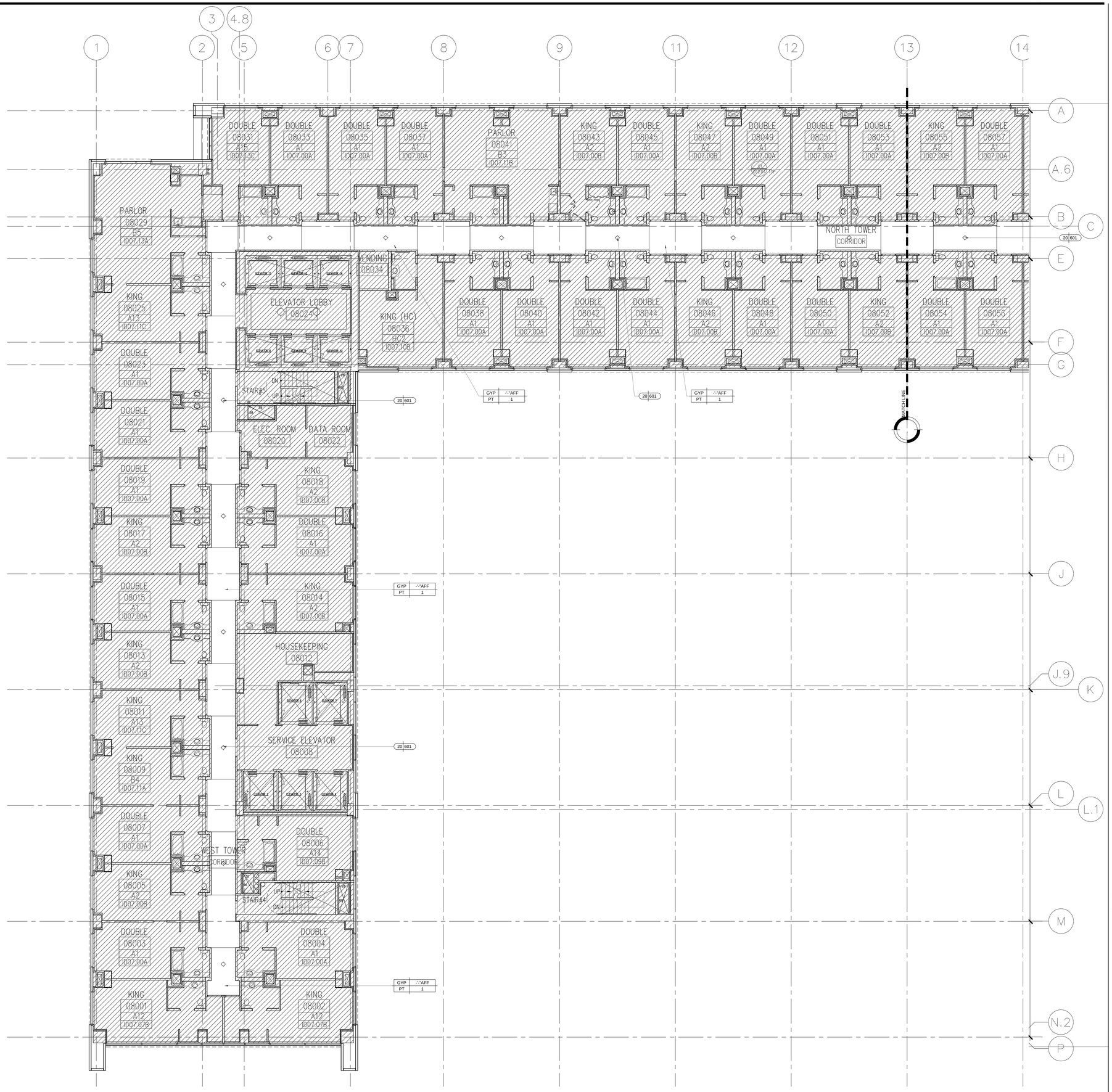

1 TYPICAL CORRIDOR REFLECTED CEILING PLAN LEVEL 8–17
Scale: 1/8"=1'–0"

KEY NOTES

SHEET NOTES

HILTON AMERICAS CONVENTION CENTER HOTEL

OWNER:
HOUSTON CONVENTION CENTER HOTEL CORPORATION
DEVELOPMENT MANAGER:

Two Houston Center
909 Fannin, Suite 3210
Houston TX 77010
Telephone 713.437.6898
Facsimile 713.437.6938

INTERIOR ARCHITECT:
Wilson Associates
Interior Architectural Design

3811 Turtle Creek Blvd.
16th Floor Dallas, Texas
75219 Tel (214) 521-6753
Fax (214) 521-0207

Issue	Date & Issue Description	By	Check
--	-- -/--/--	--	--

Seal/Signature

REGISTERED INTERIOR DESIGNER CONSTANCE H. JACKSON 1433 STATE OF TEXAS

10-18-2018

Project Name
HILTON AMERICAS CONVENTION CENTER HOTEL

Project Number
4993

CAD File Name
ID.200.TC–01.W–04.W.DWG

Description
TYPICAL CORRIDOR –
LEVELS 8 – 17 – REFLECTED CEILING PLAN

Scale
0 2" 4" 8" 16"

ID.200.TC-02.W

©2001 Gensler

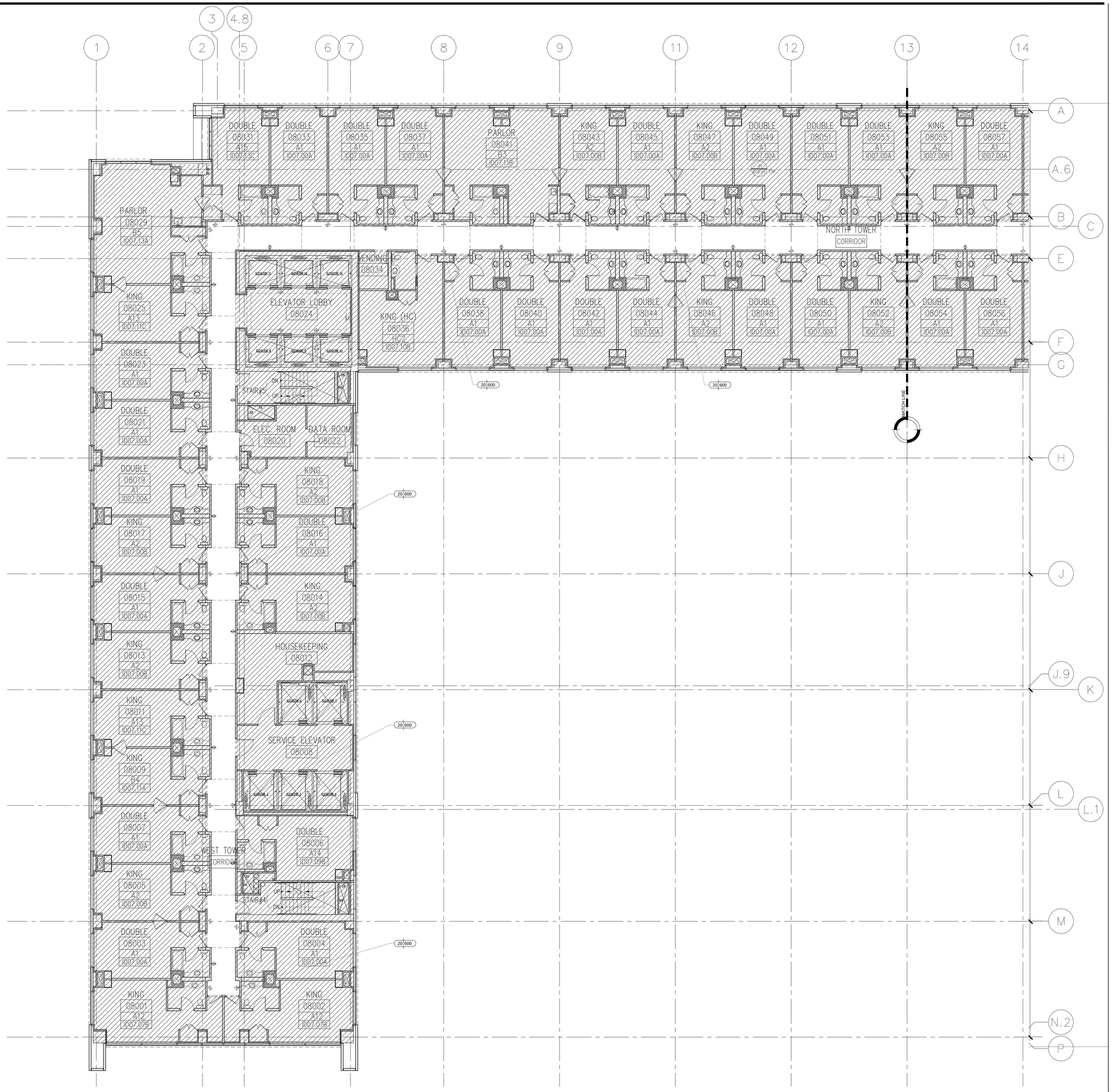

1 TYPICAL CORRIDOR ELECTRICAL PLAN LEVEL 8–17
Scale: 1/8"=1'–0"

KEY NOTES

SHEET NOTES

HILTON AMERICAS CONVENTION CENTER HOTEL

OWNER:
HOUSTON CONVENTION CENTER HOTEL CORPORATION
DEVELOPMENT MANAGER:

Two Houston Center
909 Fannin, Suite 3210
Houston TX 77010
Telephone 713.437.6898
Facsimile 713.437.6938

INTERIOR ARCHITECT:
Wilson Associates
Interior Architectural Design

3811 Turtle Creek Blvd.
16th Floor Dallas, Texas
75219 Tel (214) 521-6753
Fax (214) 521-0207

Issue	Date & Issue Description	By	Check
--	-- -/--/--	--	--

Seal/Signature

REGISTERED INTERIOR DESIGNER CONSTANCE H. JACKSON 1433 STATE OF TEXAS

Constance H. Jackson 10-18-2018

Project Name
HILTON AMERICAS CONVENTION CENTER HOTEL

Project Number
4993

CAD File Name
ID.200.TC–01.W–04.W.DWG

Description
TYPICAL CORRIDOR – LEVELS 8 – 17 – ELECTRICAL PLAN

Scale
0 2" 4" 8" 16"

ID.200.TC-03.W

©2001 Gensler

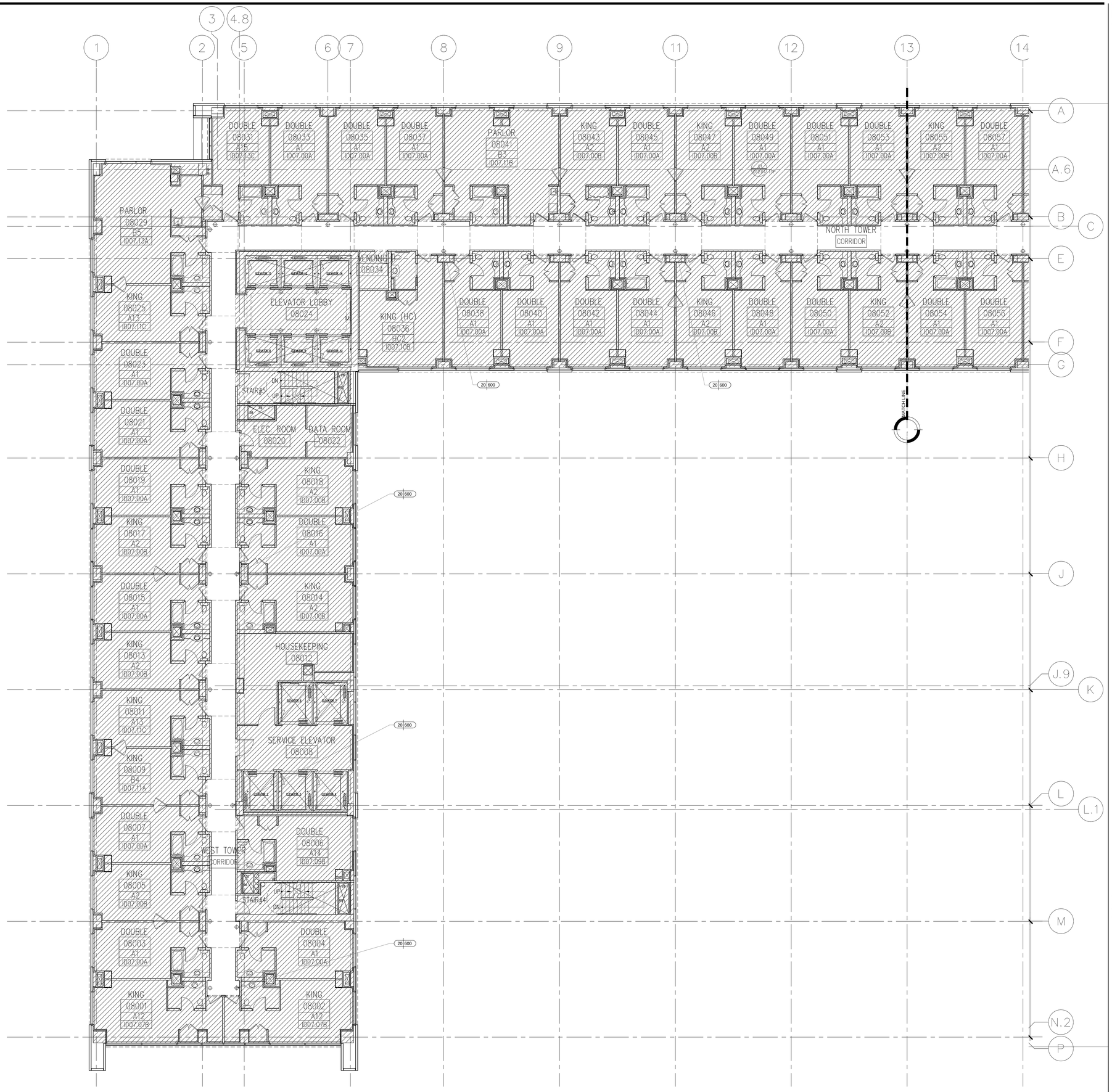

1 TYPICAL CORRIDOR FURNISHING PLAN LEVEL 8–17
Scale: 1/8"=1'-0"

KEY NOTES

SHEET NOTES

HILTON AMERICAS CONVENTION CENTER HOTEL

OWNER:
HOUSTON CONVENTION CENTER HOTEL CORPORATION
DEVELOPMENT MANAGER:

Two Houston Center
909 Fannin, Suite 3210
Houston TX 77010
Telephone 713.437.6898
Facsimile 713.437.6938

INTERIOR ARCHITECT:
Wilson Associates
Interior Architectural Design

3811 Turtle Creek Blvd.
16th Floor Dallas, Texas
75219 Tel (214) 521-6753
Fax (214) 521-0207

Issue	Date & Issue Description	By	Check
--	-- -/--/--	--	--

Seal/Signature

REGISTERED INTERIOR DESIGNER CONSTANCE H. JACKSON 1433 STATE OF TEXAS

Constance H. Jackson 10-18-2018

Project Name
HILTON AMERICAS CONVENTION CENTER HOTEL

Project Number
4993

CAD File Name
ID.200.TC-01.W-04.W.DWG

Description
TYPICAL CORRIDOR – LEVELS 8 – 17 – FURNISHING PLAN

Scale
0 2" 4" 8" 16"

ID.200.TC-04.W

©2001 Gensler

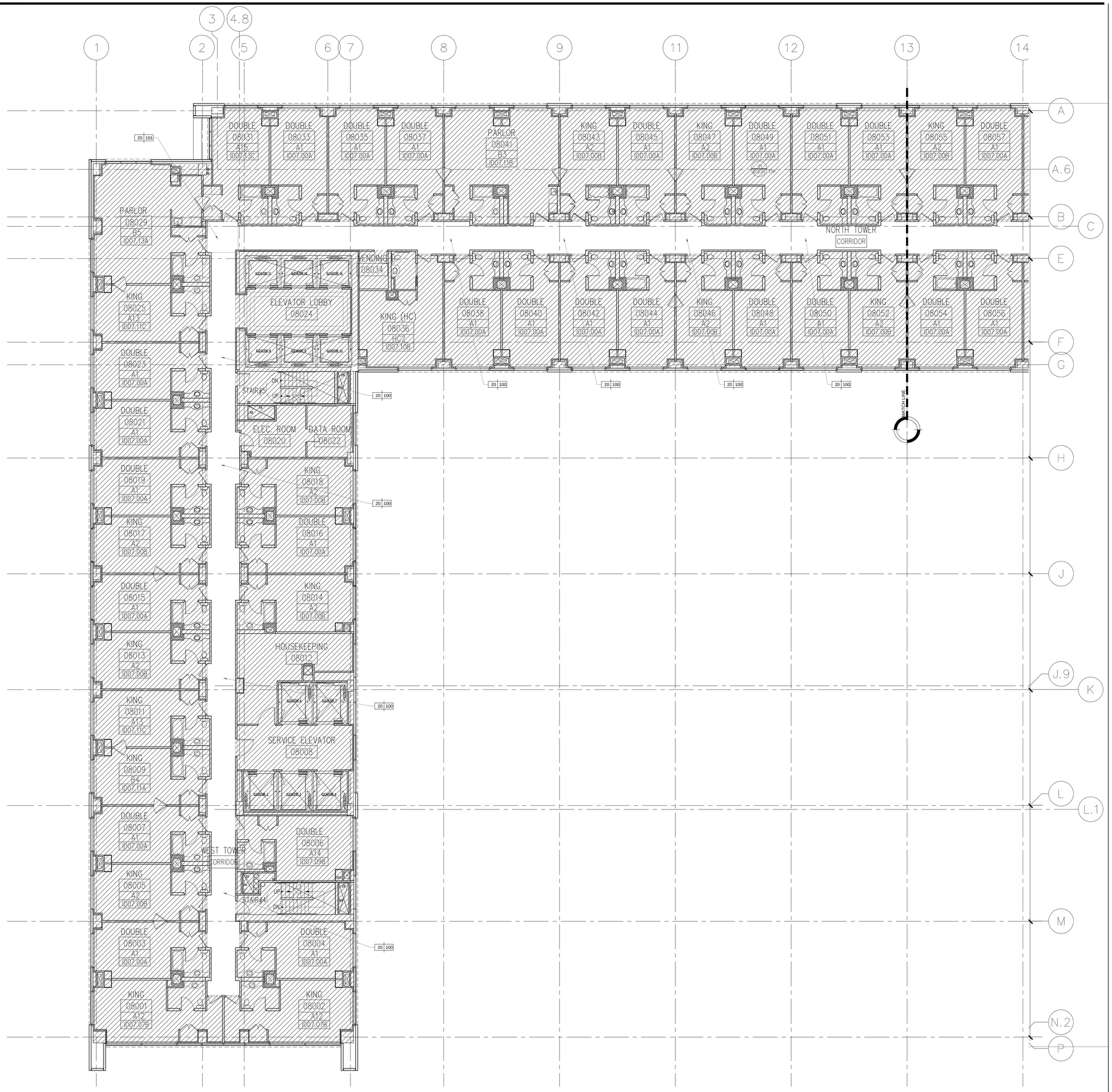

1 TYPICAL CORRIDOR FLOOR FINISH PLAN LEVEL 8–17
Scale: 1/8"=1'-0"

KEY NOTES

SHEET NOTES

HILTON AMERICAS CONVENTION CENTER HOTEL

OWNER:
HOUSTON CONVENTION CENTER HOTEL CORPORATION
DEVELOPMENT MANAGER:

Two Houston Center
909 Fannin, Suite 3210
Houston TX 77010
Telephone 713.437.6898
Facsimile 713.437.6938

INTERIOR ARCHITECT:
Wilson Associates
Interior Architectural Design

3811 Turtle Creek Blvd.
16th Floor Dallas, Texas
75219 Tel (214) 521-6753
Fax (214) 521-0207

Issue	Date & Issue Description	By	Check
--	-- -- / -- / -- --	--	--

Seal/Signature

REGISTERED INTERIOR DESIGNER CONSTANCE H. GALLISON 1433 STATE OF TEXAS

Constance H. Gallison 10-18-2018

Project Name
HILTON AMERICAS CONVENTION CENTER HOTEL

Project Number
4993

CAD File Name
ID.200.TC-01.W-04.W.DWG

Description
TYPICAL CORRIDOR – LEVELS 8 – 17 – FLOOR FINISH PLAN

Scale
0 2" 4" 8" 16"

ID.200.TC-04.W

©2001 Gensler

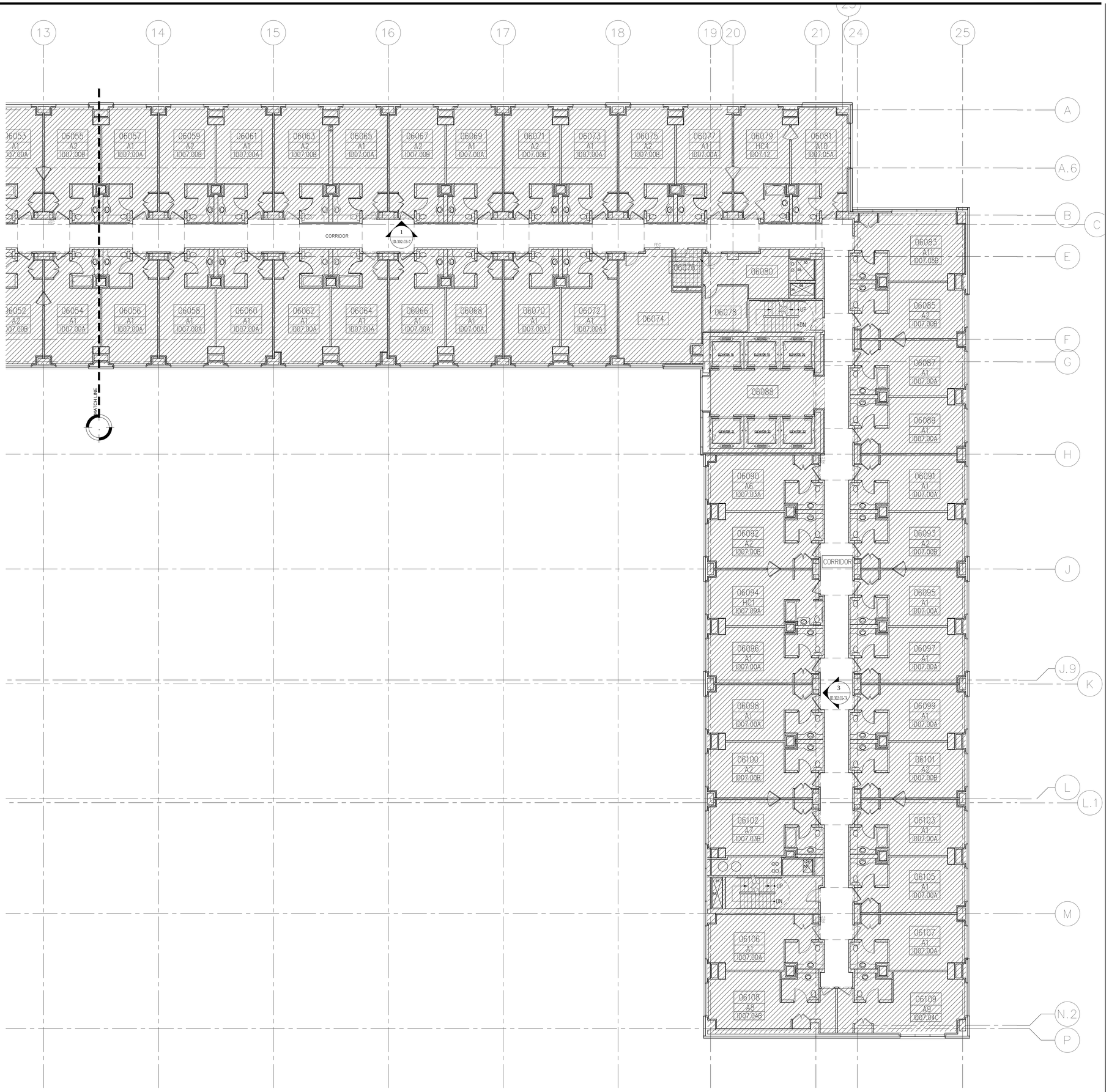

1 CORRIDOR FLOOR PLAN LEVEL 6–7
Scale: 1/8"=1'–0"

KEY NOTES

SHEET NOTES

HILTON AMERICAS CONVENTION CENTER HOTEL

OWNER:
HOUSTON CONVENTION CENTER HOTEL CORPORATION
DEVELOPMENT MANAGER:

Two Houston Center
909 Fannin, Suite 3210
Houston TX 77010
Telephone 713.437.6898
Facsimile 713.437.6938

INTERIOR ARCHITECT:
Wilson Associates
Interior Architectural Design

3811 Turtle Creek Blvd.
16th Floor Dallas, Texas
75219 Tel (214) 521-6753
Fax (214) 521-0207

Issue	Date & Issue Description	By	Check
-- --	-- -- / -- -- / -- --	-- --	-- --

Seal/Signature

REGISTERED INTERIOR DESIGNER CONSTANCE H. JACKSON 1433 STATE OF TEXAS

Constance H. Jackson 10-18-2018

Project Name
HILTON AMERICAS CONVENTION CENTER HOTEL

Project Number
4993

CAD File Name
ID.201.C6–7.E.DWG

Description
LEVEL 6 – 7 CORRIDOR – FLOOR PLAN

Scale
0 2" 4" 8" 16"

ID.201.C6-7.E

©2001 Gensler

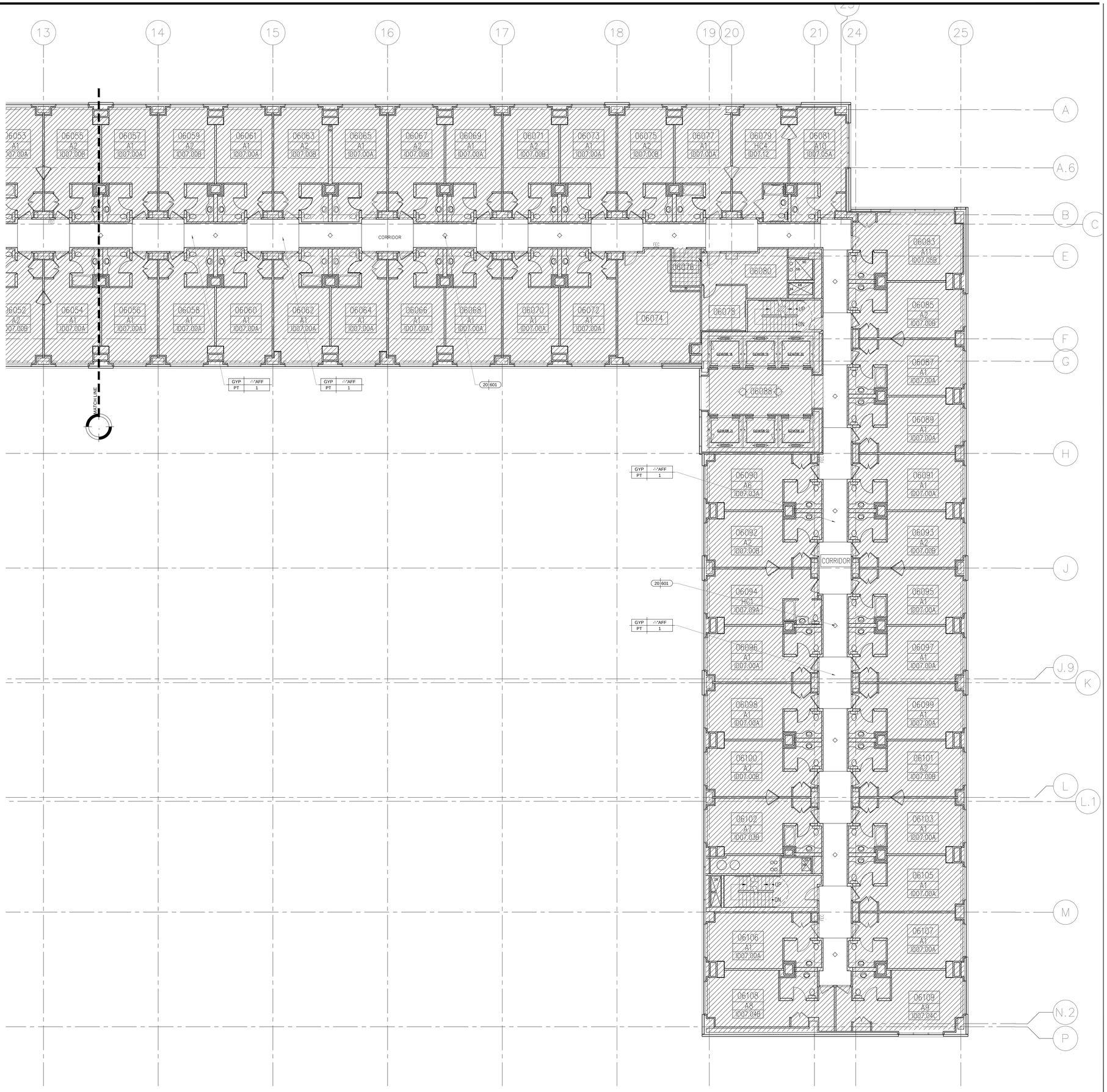

1 CORRIDOR REFLECTED CEILING PLAN LEVEL 6–7
Scale: 1/8"=1'-0"

KEY NOTES

SHEET NOTES

HILTON AMERICAS CONVENTION CENTER HOTEL

OWNER:
HOUSTON CONVENTION CENTER HOTEL CORPORATION
DEVELOPMENT MANAGER:

Two Houston Center
909 Fannin, Suite 3210
Houston TX 77010
Telephone 713.437.6898
Facsimile 713.437.6938

INTERIOR ARCHITECT:
Wilson Associates
Interior Architectural Design

3811 Turtle Creek Blvd.
16th Floor Dallas, Texas
75219 Tel (214) 521-6753
Fax (214) 521-0207

Issue	Date & Issue Description	By	Check
--	-- -- / -- -- / -- --	--	--

Seal/Signature

REGISTERED INTERIOR DESIGNER CONSTANCE H. JACKSON 1433 STATE OF TEXAS

Constance H. Jackson 10-18-2018

Project Name
HILTON AMERICAS CONVENTION CENTER HOTEL

Project Number
4993

CAD File Name
ID.201.C6–7.E.DWG

Description
LEVEL 6 – 7 CORRIDOR – REFLECTED CEILING PLAN

Scale
0 2" 4" 8" 16"

ID.201A.C6-7.E

©2001 Gensler

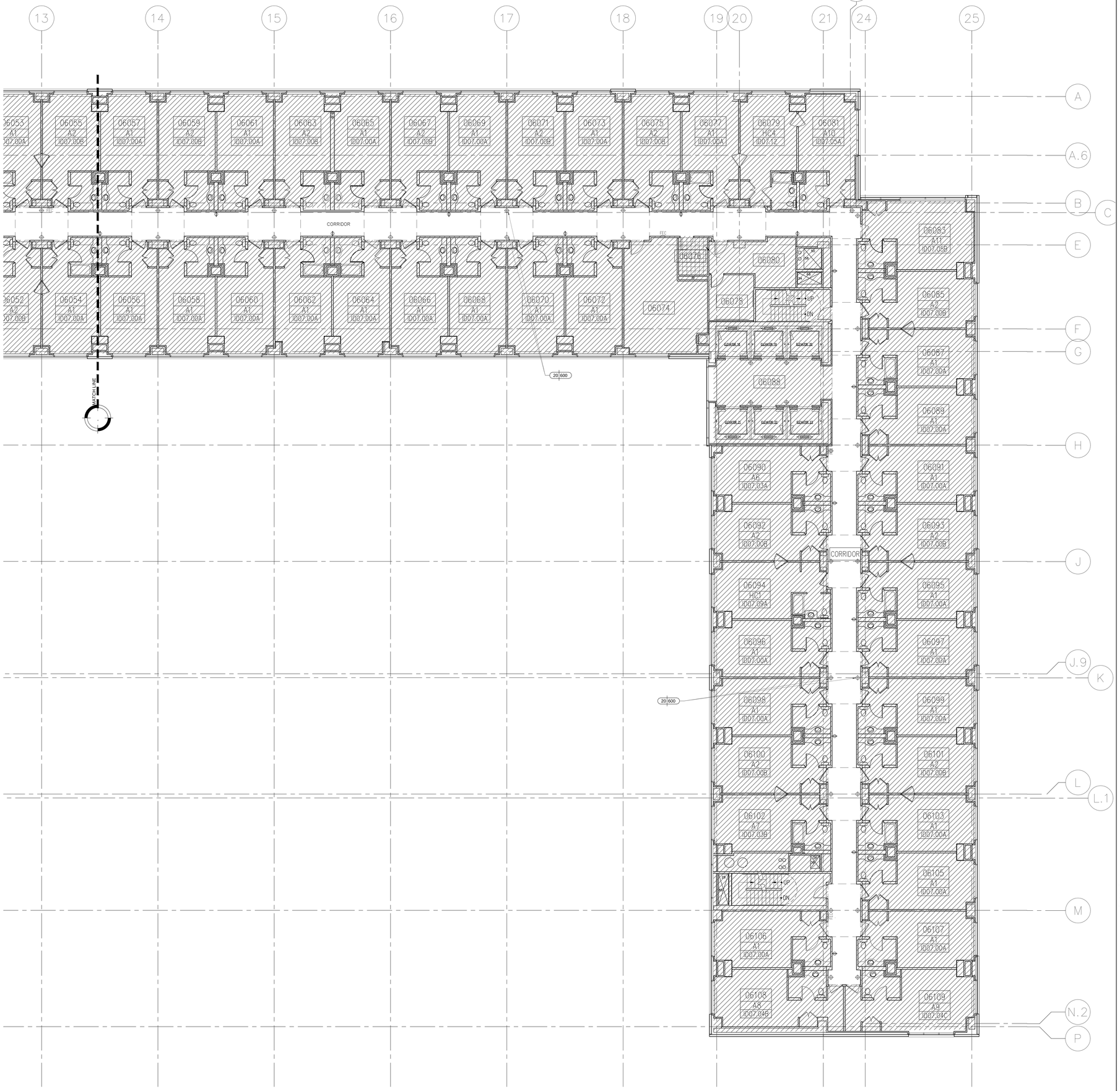

1 CORRIDOR ELECTRICAL PLAN LEVEL 6–7
Scale: 1/8"=1'–0"

KEY NOTES

SHEET NOTES

HILTON AMERICAS CONVENTION CENTER HOTEL

OWNER:
HOUSTON CONVENTION CENTER HOTEL CORPORATION
DEVELOPMENT MANAGER:

Two Houston Center
909 Fannin, Suite 3210
Houston TX 77010
Telephone 713.437.6898
Facsimile 713.437.6938

INTERIOR ARCHITECT:
Wilson Associates
Interior Architectural Design

3811 Turtle Creek Blvd.
16th Floor Dallas, Texas
75219 Tel (214) 521-6753
Fax (214) 521-0207

Issue	Date & Issue Description	By	Check
-- --	-- -- / -- -- / -- --	-- --	-- --

Seal/Signature

REGISTERED INTERIOR DESIGNER
CONSTANCE H. JACKSON
1433
STATE OF TEXAS

Constance H. Jackson
10-18-2018

Project Name
HILTON AMERICAS CONVENTION CENTER HOTEL

Project Number
4993

CAD File Name
ID.201.C6–7.E.DWG

Description
LEVEL 6 – 7 CORRIDOR – ELECTRICAL PLAN

Scale
0 2" 4" 8" 16"

ID.201B.C6-7.E

©2001 Gensler

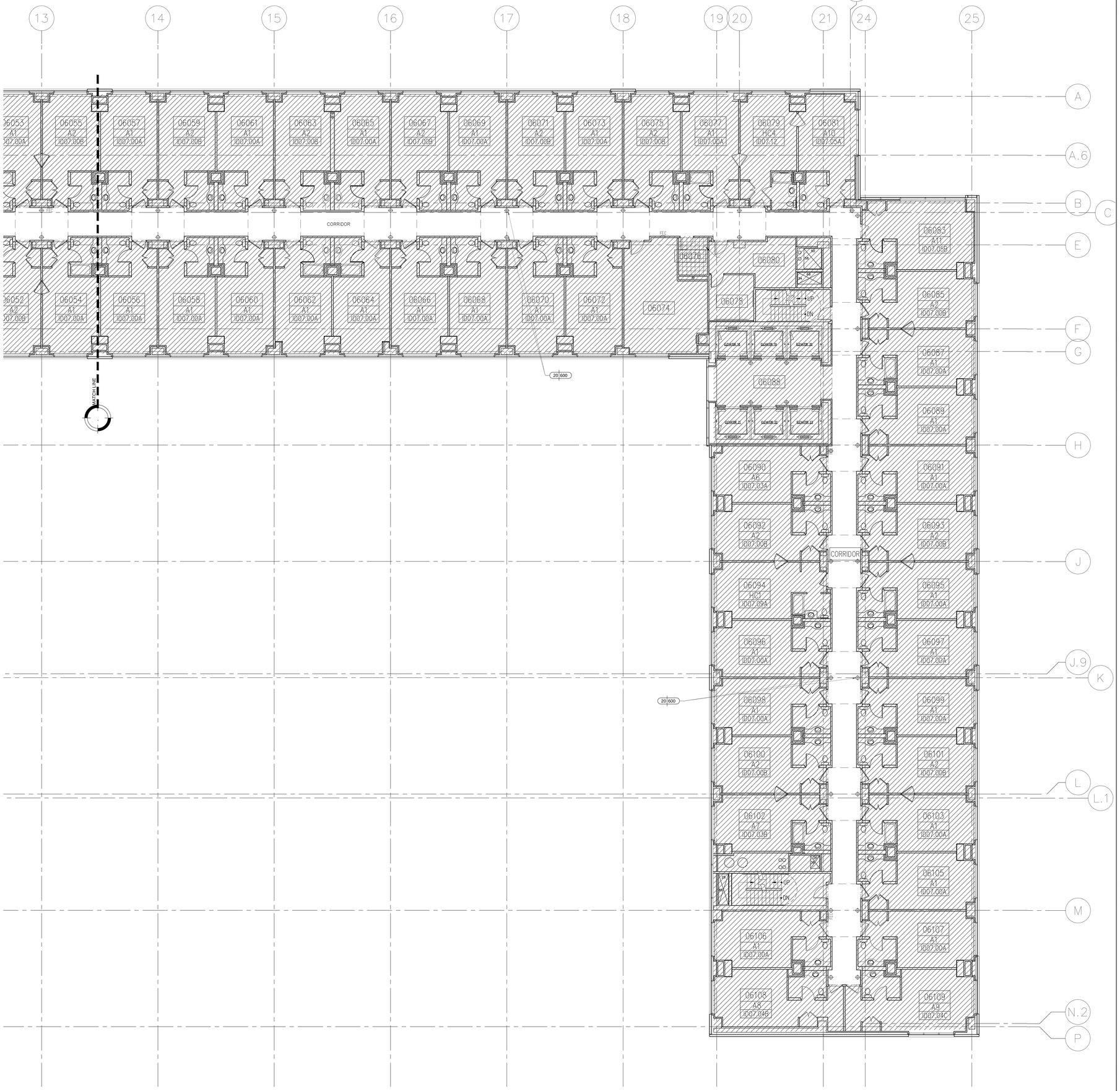

1 CORRIDOR FURNISHING PLAN LEVEL 6–7
Scale: 1/8"=1'–0"

KEY NOTES

SHEET NOTES

HILTON AMERICAS CONVENTION CENTER HOTEL

OWNER:
HOUSTON CONVENTION CENTER HOTEL CORPORATION
Two Houston Center
909 Fannin, Suite 3210
Houston TX 77010
Telephone 713.437.6898
Facsimile 713.437.6938

DEVELOPMENT MANAGER:

INTERIOR ARCHITECT:
Wilson Associates
Interior Architectural Design
3811 Turtle Creek Blvd.
16th Floor Dallas, Texas
75219 Tel (214) 521-6753
Fax (214) 521-0207

Issue	Date & Issue Description	By	Check
-- --	-- -- / -- -- / -- --	-- --	-- --

Seal/Signature

REGISTERED INTERIOR DESIGNER CONSTANCE H. JACKSON 1433 STATE OF TEXAS

Constance H. Jackson 10-18-2018

Project Name
HILTON AMERICAS CONVENTION CENTER HOTEL

Project Number
4993

CAD File Name
ID.201.C6–7.E.DWG

Description
LEVEL 6 – 7 CORRIDOR – FURNISHING PLAN

Scale
0 2" 4" 8" 16"

ID.201C.C6-7.E

©2001 Gensler

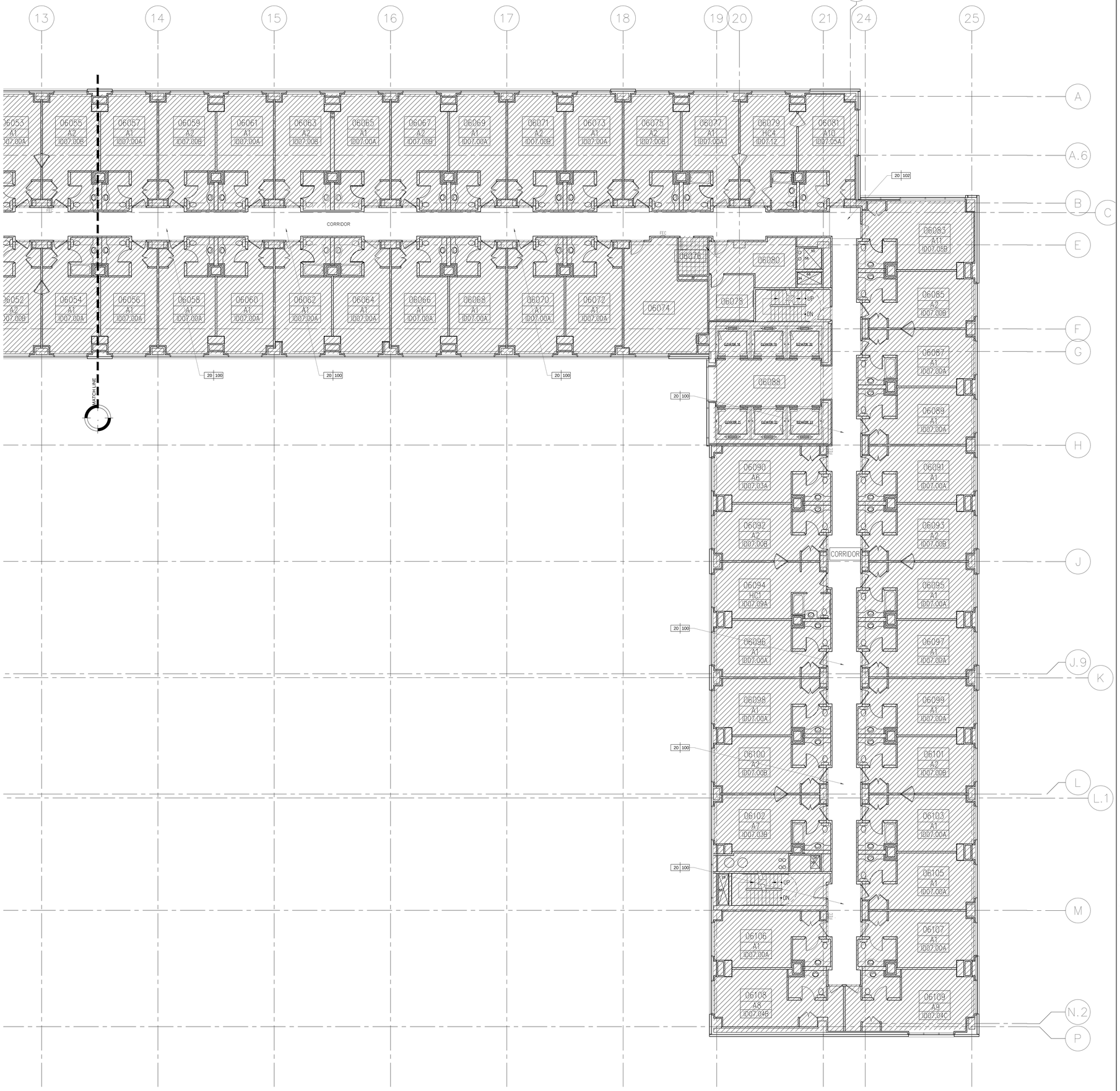

1 CORRIDOR FLOOR FINISH PLAN LEVEL 6–7
Scale: 1/8"=1'–0"

KEY NOTES

SHEET NOTES

HILTON AMERICAS CONVENTION CENTER HOTEL

OWNER:

HOUSTON CONVENTION CENTER HOTEL CORPORATION

DEVELOPMENT MANAGER:

Two Houston Center
909 Fannin, Suite 3210
Houston TX 77010
Telephone 713.437.6898
Facsimile 713.437.6938

INTERIOR ARCHITECT:

Wilson Associates
Interior Architectural Design

3811 Turtle Creek Blvd.
16th Floor Dallas, Texas
75219 Tel (214) 521-6753
Fax (214) 521-0207

Issue	Date & Issue Description	By	Check
-- --	-- -- / -- -- / -- --	-- --	-- --

Seal/Signature

REGISTERED INTERIOR DESIGNER CONSTANCE H. JACKSON 1433 STATE OF TEXAS

Constance H. Jackson 10-18-2018

Project Name
HILTON AMERICAS CONVENTION CENTER HOTEL

Project Number
4993

CAD File Name
ID.201.C6–7.E.DWG

Description
LEVEL 6 – 7 CORRIDOR – FLOOR FINISH PLAN

Scale
0 2" 4" 8" 16"

ID.201D.C6-7.E

©2001 Gensler

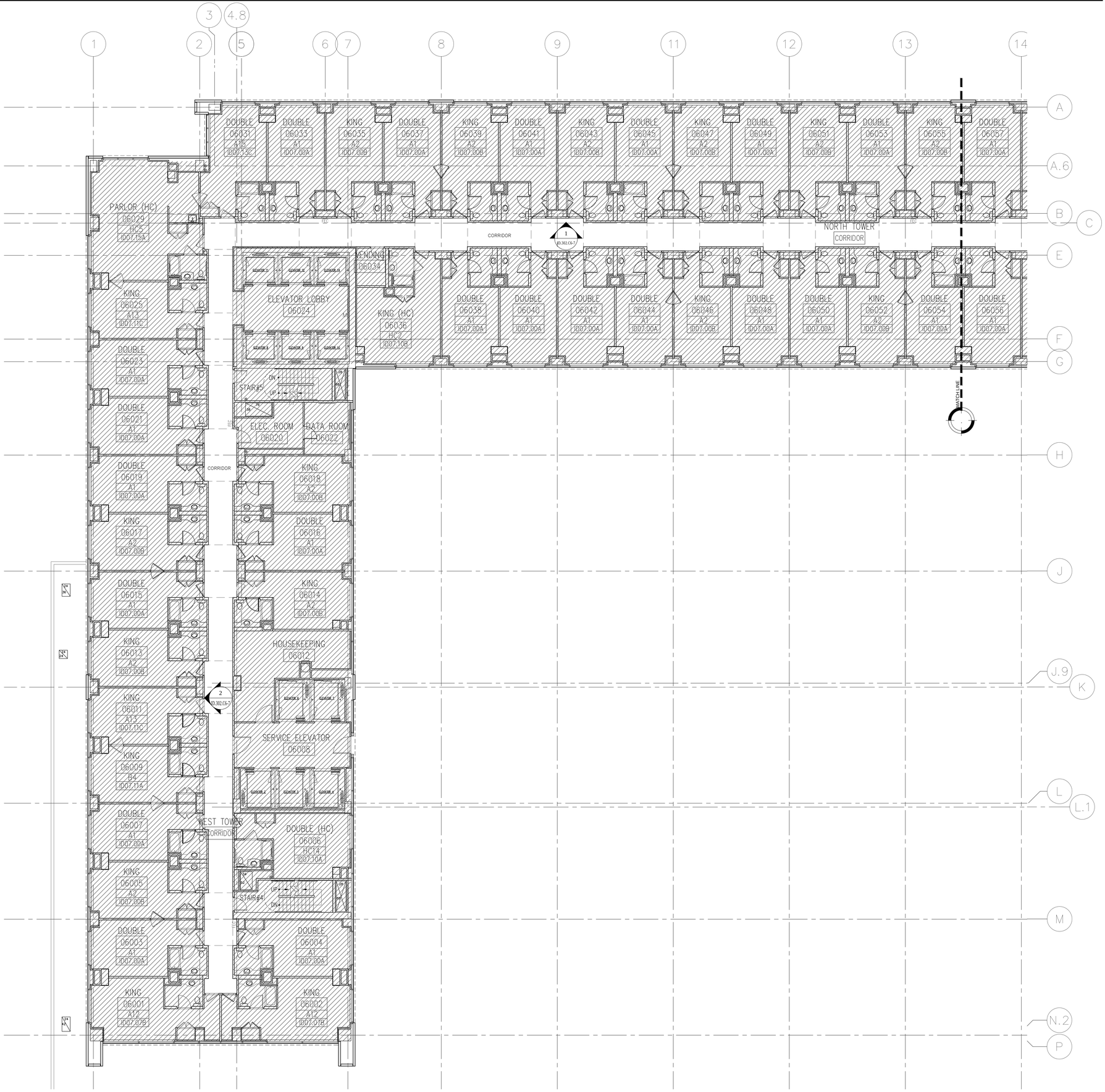

1 CORRIDOR FLOOR PLAN LEVEL 6–7
Scale: 1/8"=1'-0"

KEY NOTES

SHEET NOTES

HILTON AMERICAS CONVENTION CENTER HOTEL

OWNER:
HOUSTON CONVENTION CENTER HOTEL CORPORATION
DEVELOPMENT MANAGER:

Two Houston Center
909 Fannin, Suite 3210
Houston TX 77010
Telephone 713.437.6898
Facsimile 713.437.6938

INTERIOR ARCHITECT:
Wilson Associates
Interior Architectural Design

3811 Turtle Creek Blvd.
16th Floor Dallas, Texas
75219 Tel (214) 521-6753
Fax (214) 521-0207

Issue	Date & Issue Description	By	Check
--	-- -/-/--	--	--

Seal/Signature

REGISTERED INTERIOR DESIGNER
CONSTANCE H. JACKSON
1433
STATE OF TEXAS

Constance H. Jackson 10-18-2018

Project Name
HILTON AMERICAS CONVENTION CENTER HOTEL

Project Number
4993

CAD File Name
ID.201.C6-7.W.DWG

Description
LEVEL 6 – 7 CORRIDOR – FURNISHING PLAN

Scale
0 2" 4" 8" 16"

ID.201.C6-7.W

©2001 Gensler

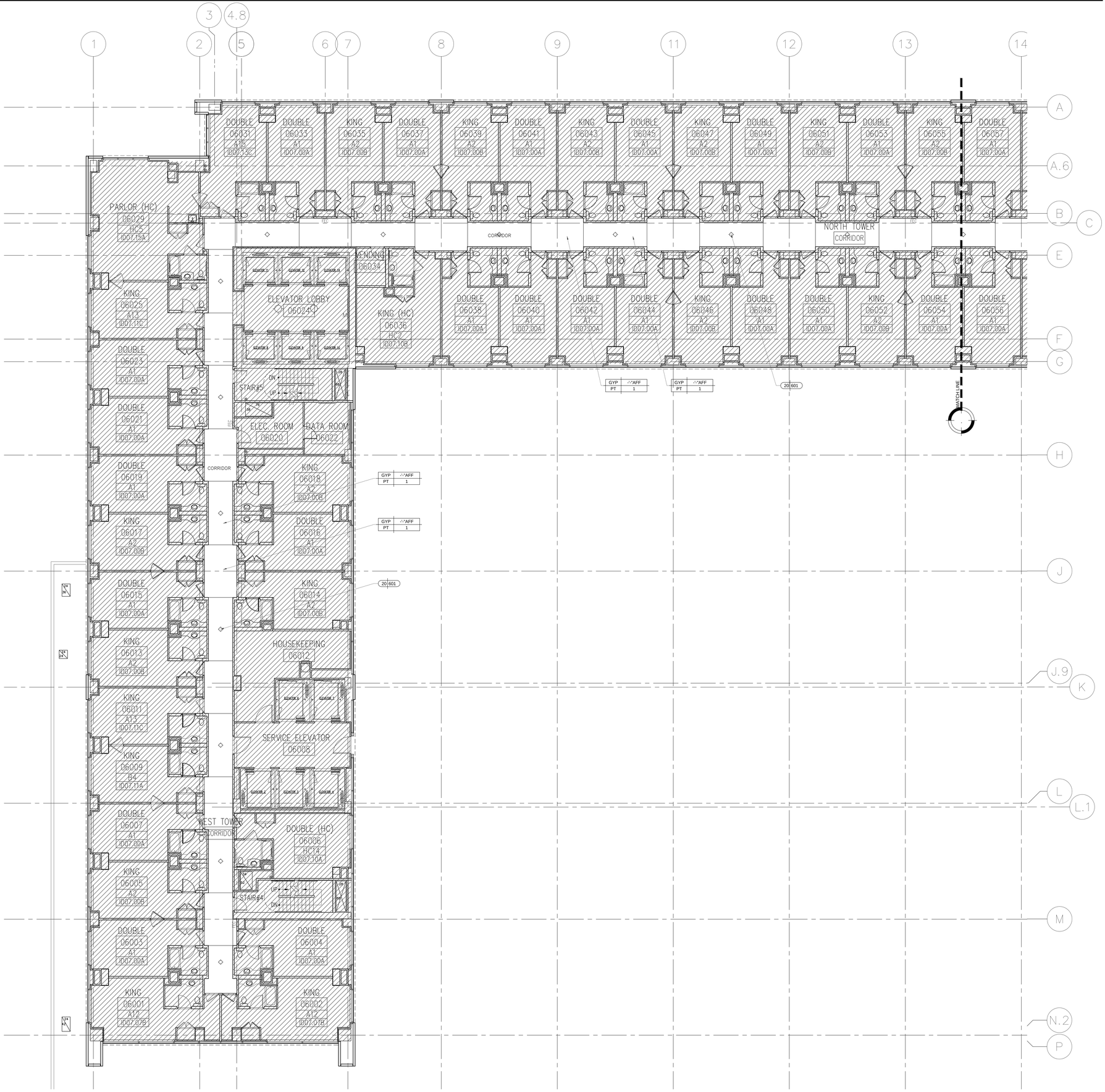

1 CORRIDOR REFLECTED CEILING PLAN LEVEL 6–7
Scale: 1/8"=1'–0"

KEY NOTES

SHEET NOTES

HILTON AMERICAS CONVENTION CENTER HOTEL

OWNER:
HOUSTON CONVENTION CENTER HOTEL CORPORATION
DEVELOPMENT MANAGER:

Two Houston Center
909 Fannin, Suite 3210
Houston TX 77010
Telephone 713.437.6898
Facsimile 713.437.6938

INTERIOR ARCHITECT:
Wilson Associates
Interior Architectural Design

3811 Turtle Creek Blvd.
16th Floor Dallas, Texas
75219 Tel (214) 521-6753
Fax (214) 521-0207

Issue	Date & Issue Description	By	Check
--	-- -/--/--	--	--

Seal/Signature

REGISTERED INTERIOR DESIGNER CONSTANCE H. JACKSON 1433 STATE OF TEXAS

10-18-2018

Project Name
HILTON AMERICAS CONVENTION CENTER HOTEL

Project Number
4993

CAD File Name
ID.201.C6–7.W.DWG

Description
LEVEL 6 – 7 CORRIDOR – REFLECTED CEILING PLAN

Scale
0 2" 4" 8" 16"

ID.201A.C6-7.W

©2001 Gensler

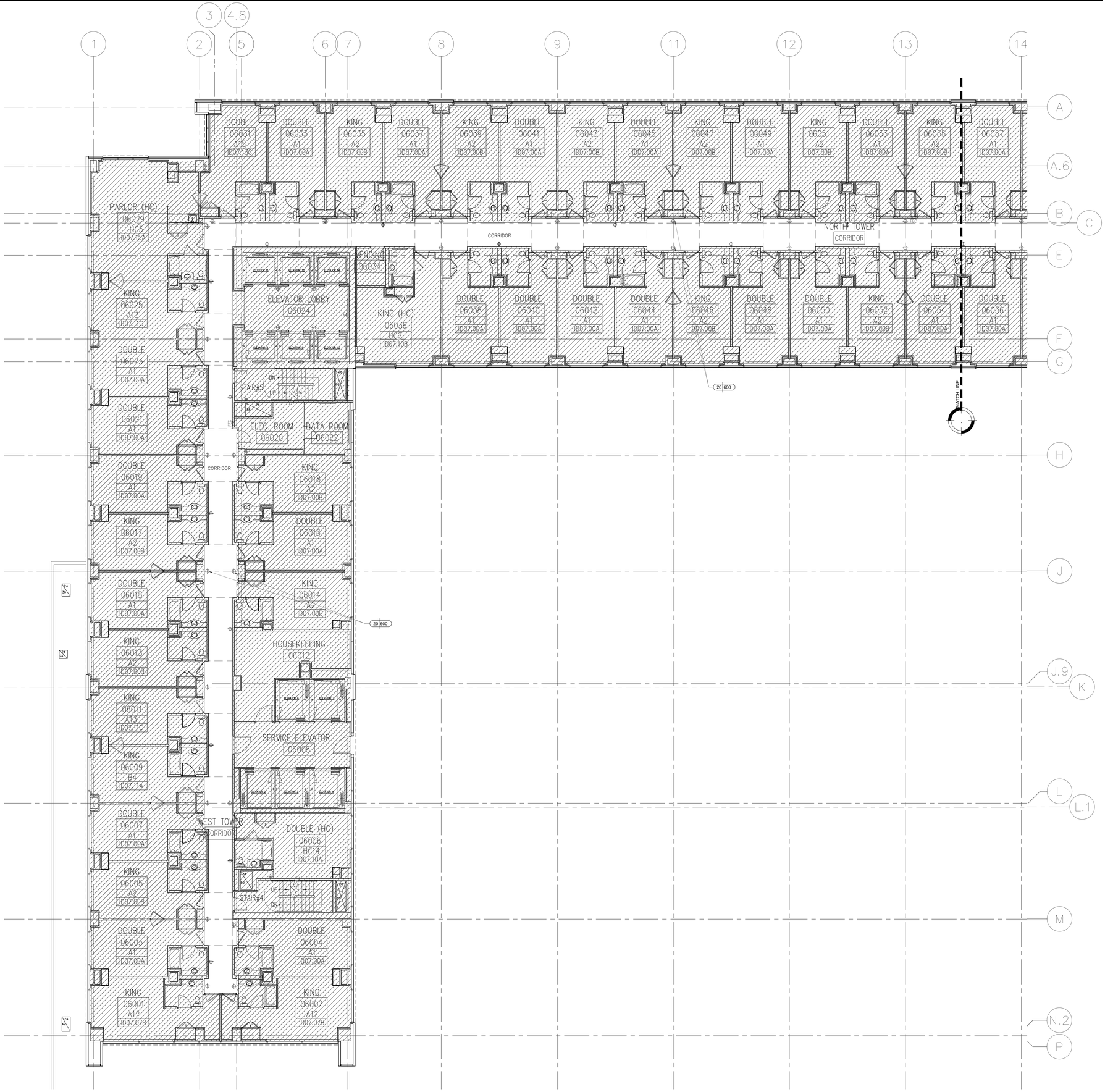

1 CORRIDOR ELECTRICAL PLAN LEVEL 6–7
Scale: 1/8"=1'–0"

KEY NOTES

SHEET NOTES

HILTON AMERICAS CONVENTION CENTER HOTEL

OWNER:
HOUSTON CONVENTION CENTER HOTEL CORPORATION
DEVELOPMENT MANAGER:

Two Houston Center
909 Fannin, Suite 3210
Houston TX 77010
Telephone 713.437.6898
Facsimile 713.437.6938

INTERIOR ARCHITECT:
Wilson Associates
Interior Architectural Design

3811 Turtle Creek Blvd.
16th Floor Dallas, Texas
75219 Tel (214) 521-6753
Fax (214) 521-0207

Issue	Date & Issue Description	By	Check
--	-- -- / -- / -- --	--	--

Seal/Signature

REGISTERED INTERIOR DESIGNER
CONSTANCE H. GAULKSON
1433
STATE OF TEXAS

10-18-2018

Project Name
HILTON AMERICAS CONVENTION CENTER HOTEL

Project Number
4993

CAD File Name
ID.201.C6–7.W.DWG

Description
LEVEL 6 – 7 CORRIDOR – ELECTRICAL PLAN

Scale
0 2" 4" 8" 16"

ID.201B.C6-7.W

©2001 Gensler

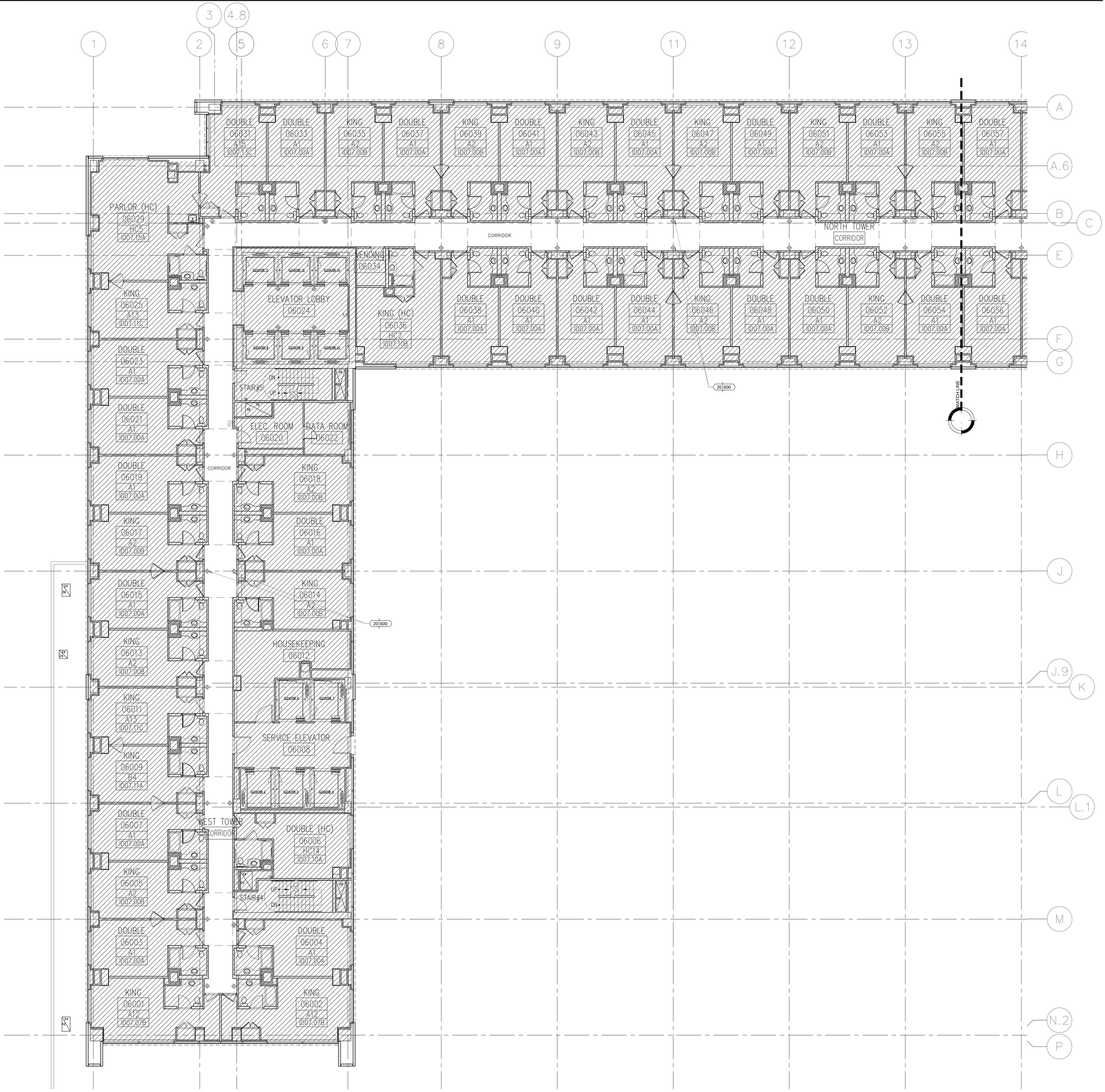

1 CORRIDOR FURNISHING PLAN LEVEL 6–7
Scale: 1/8"=1'-0"

KEY NOTES

SHEET NOTES

HILTON AMERICAS CONVENTION CENTER HOTEL

OWNER:
HOUSTON CONVENTION CENTER HOTEL CORPORATION
DEVELOPMENT MANAGER:

Two Houston Center
909 Fannin, Suite 3210
Houston TX 77010
Telephone 713.437.6898
Facsimile 713.437.6938

INTERIOR ARCHITECT:
Wilson Associates
Interior Architectural Design

3811 Turtle Creek Blvd.
16th Floor Dallas, Texas
75219 Tel (214) 521-6753
Fax (214) 521-0207

Issue	Date & Issue Description	By	Check
--	-- -- / -- / -- --	--	--

Seal/Signature

REGISTERED INTERIOR DESIGNER
CONSTANCE H. JACKSON
1433
STATE OF TEXAS

Constance H. Jackson 10-18-2018

Project Name
HILTON AMERICAS CONVENTION CENTER HOTEL

Project Number
4993

CAD File Name
ID.201.C6–7.W.DWG

Description
LEVEL 6 – 7 CORRIDOR – FURNISHING PLAN

Scale
0 2" 4" 8" 16"

ID.201C.C6-7.W

©2001 Gensler

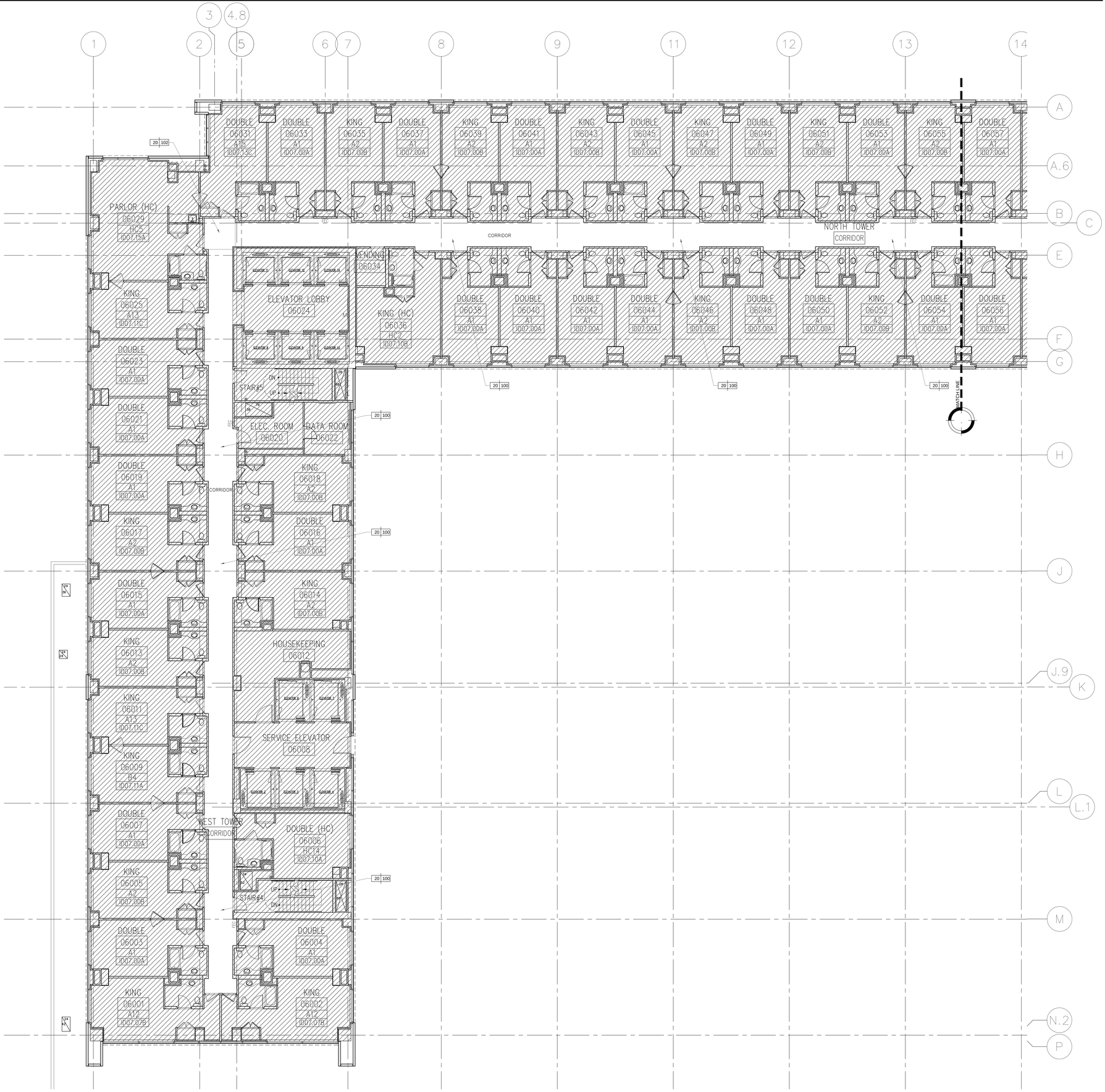

1 CORRIDOR FLOOR FINISH PLAN LEVEL 6–7
Scale: 1/8"=1'-0"

KEY NOTES

SHEET NOTES

HILTON AMERICAS CONVENTION CENTER HOTEL

OWNER:
HOUSTON CONVENTION CENTER HOTEL CORPORATION
DEVELOPMENT MANAGER:

Two Houston Center
909 Fannin, Suite 3210
Houston TX 77010
Telephone 713.437.6898
Facsimile 713.437.6938

INTERIOR ARCHITECT:
Wilson Associates
Interior Architectural Design

3811 Turtle Creek Blvd.
16th Floor Dallas, Texas
75219 Tel (214) 521-6753
Fax (214) 521-0207

Issue	Date & Issue Description	By	Check
--	-- -- / -- / --	--	--

Seal/Signature

REGISTERED INTERIOR DESIGNER
CONSTANCE H. JACKSON
1433
STATE OF TEXAS

Constance H. Jackson 10-18-2018

Project Name
HILTON AMERICAS CONVENTION CENTER HOTEL

Project Number
4993

CAD File Name
ID.201.C6-7.W.DWG

Description
LEVEL 6 – 7 CORRIDOR – FLOOR FINISH PLAN

Scale
0 2" 4" 8" 16"

ID.201D.C6-7.W

©2001 Gensler

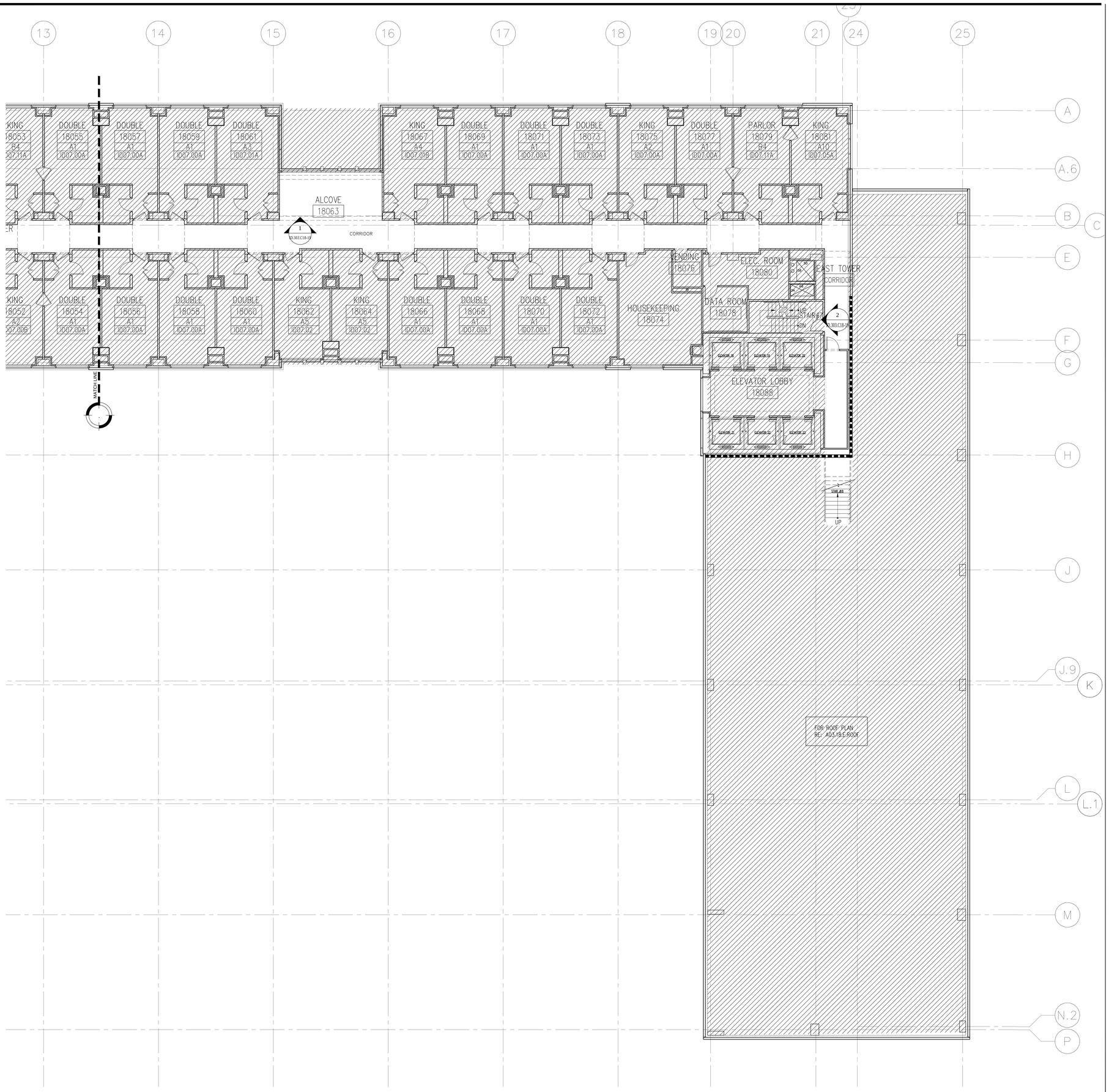

1 CORRIDOR FLOOR PLAN LEVEL 18
Scale: 1/8"=1'-0"

KEY NOTES

SHEET NOTES

HILTON AMERICAS CONVENTION CENTER HOTEL

OWNER:
HOUSTON CONVENTION CENTER HOTEL CORPORATION
Two Houston Center
909 Fannin, Suite 3210
Houston TX 77010
Telephone 713.437.6898
Facsimile 713.437.6938

DEVELOPMENT MANAGER:

INTERIOR ARCHITECT:
Wilson Associates
Interior Architectural Design
3811 Turtle Creek Blvd.
16th Floor Dallas, Texas
75219 Tel (214) 521-6753
Fax (214) 521-0207

Issue	Date & Issue Description	By	Check
-- --	-- -- / -- -- / -- --	-- --	-- --

Seal/Signature

REGISTERED INTERIOR DESIGNER CONSTANCE H. JACKSON 1433 STATE OF TEXAS

Constance H. Jackson 10-18-2018

Project Name
HILTON AMERICAS CONVENTION CENTER HOTEL

Project Number
4993

CAD File Name
ID.202.C18.E.DWG

Description
LEVEL 18 CORRIDOR – FLOOR PLAN

Scale
0 2" 4" 8" 16"

ID.202.C18.E

©2001 Gensler

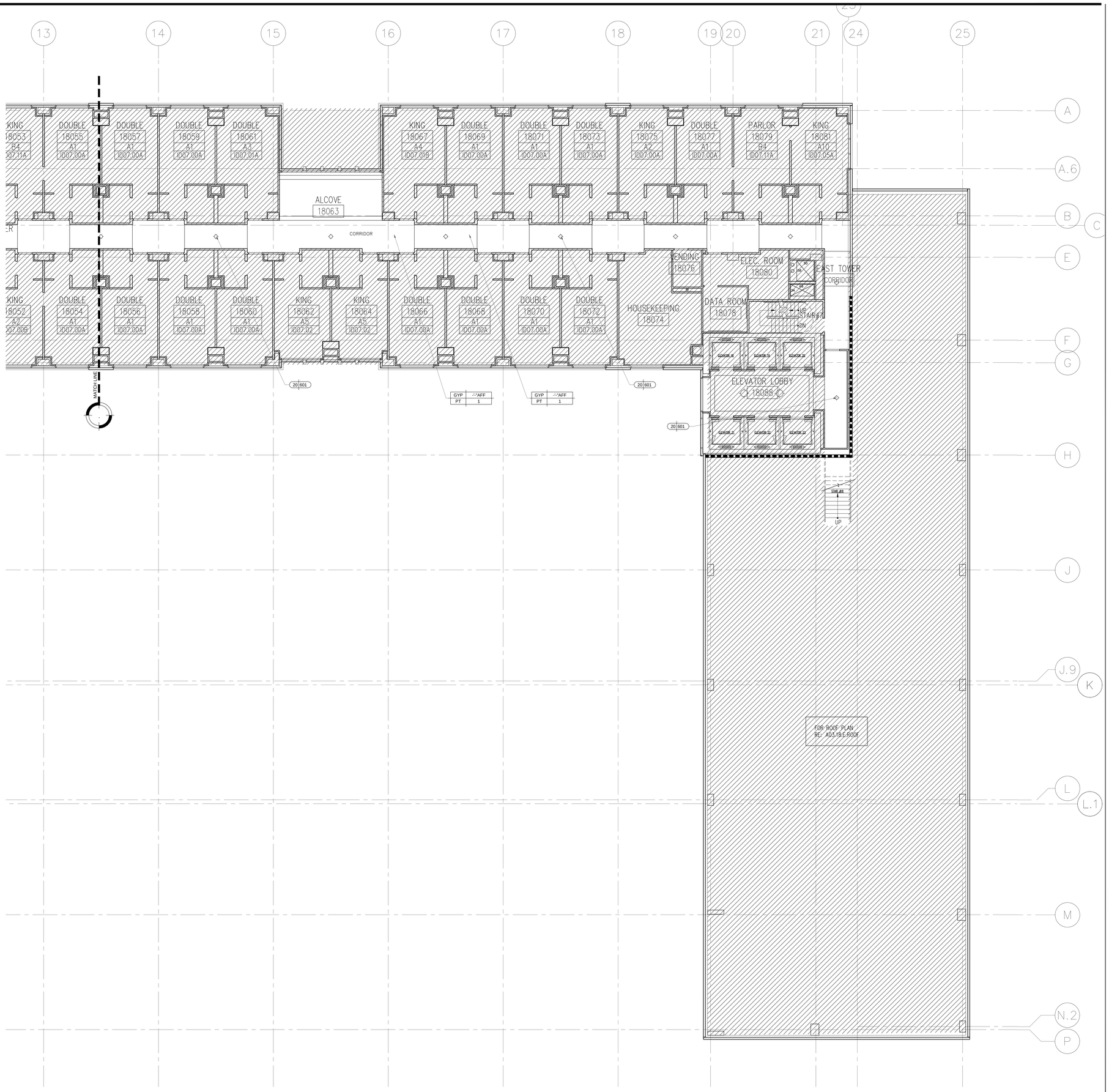

1 CORRIDOR REFLECTED CEILING PLAN LEVEL 18
Scale: 1/8"=1'-0"

KEY NOTES

SHEET NOTES

HILTON AMERICAS CONVENTION CENTER HOTEL

OWNER:
HOUSTON CONVENTION CENTER HOTEL CORPORATION
Two Houston Center
909 Fannin, Suite 3210
Houston TX 77010
Telephone 713.437.6898
Facsimile 713.437.6938

DEVELOPMENT MANAGER:

INTERIOR ARCHITECT:
Wilson Associates
Interior Architectural Design
3811 Turtle Creek Blvd.
16th Floor Dallas, Texas
75219 Tel (214) 521-6753
Fax (214) 521-0207

Issue	Date & Issue Description	By	Check
-- --	-- -- / -- -- / -- --	-- --	-- --

Seal/Signature

REGISTERED INTERIOR DESIGNER CONSTANCE H. JACKSON 1433 STATE OF TEXAS

Constance H. Jackson 10-18-2018

Project Name
HILTON AMERICAS CONVENTION CENTER HOTEL

Project Number
4993

CAD File Name
ID.202.C18.E.DWG

Description
LEVEL 18 CORRIDOR – REFLECTED CEILING PLAN

Scale
0 2" 4" 8" 16"

ID.202A.C18.E

©2001 Gensler

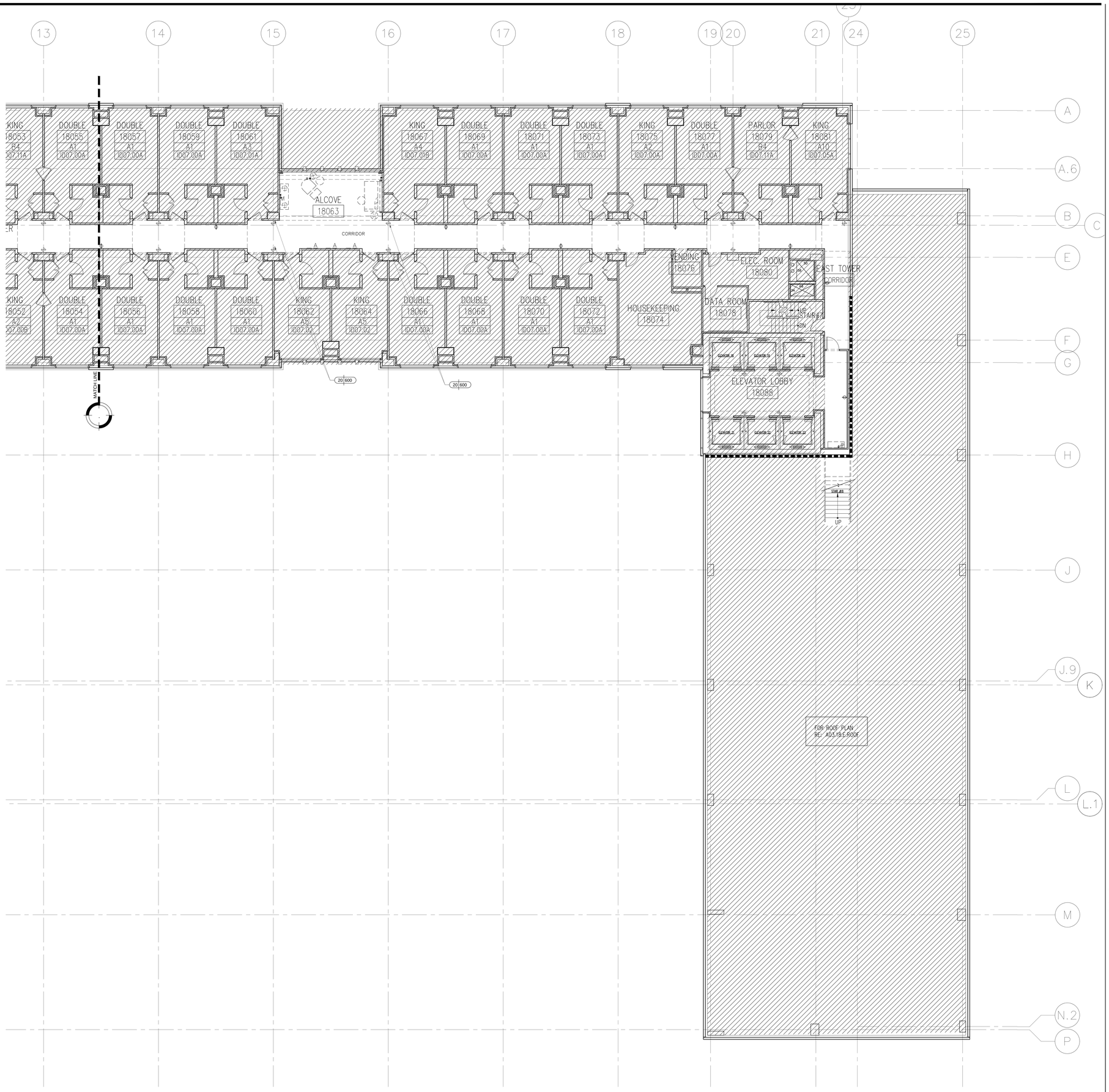

1 CORRIDOR ELECTRICAL PLAN LEVEL 18
Scale: 1/8"=1'-0"

KEY NOTES

SHEET NOTES

HILTON AMERICAS CONVENTION CENTER HOTEL

OWNER:

HOUSTON CONVENTION CENTER HOTEL CORPORATION

Two Houston Center
909 Fannin, Suite 3210
Houston TX 77010
Telephone 713.437.6898
Facsimile 713.437.6938

DEVELOPMENT MANAGER:

INTERIOR ARCHITECT:

Wilson Associates
Interior Architectural Design

3811 Turtle Creek Blvd.
16th Floor Dallas, Texas
75219 Tel (214) 521-6753
Fax (214) 521-0207

Issue	Date & Issue Description	By	Check
-- --	-- -- / -- -- / -- --	-- --	-- --

Seal/Signature

REGISTERED INTERIOR DESIGNER
CONSTANCE H. GAULSON
1433
STATE OF TEXAS

Constance H. Gaulson 10-18-2018

Project Name
HILTON AMERICAS CONVENTION CENTER HOTEL

Project Number
4993

CAD File Name
ID.202.C18.E.DWG

Description
LEVEL 18 CORRIDOR – ELECTRICAL PLAN

Scale
0 2" 4" 8" 16"

ID.202B.C18.E

©2001 Gensler

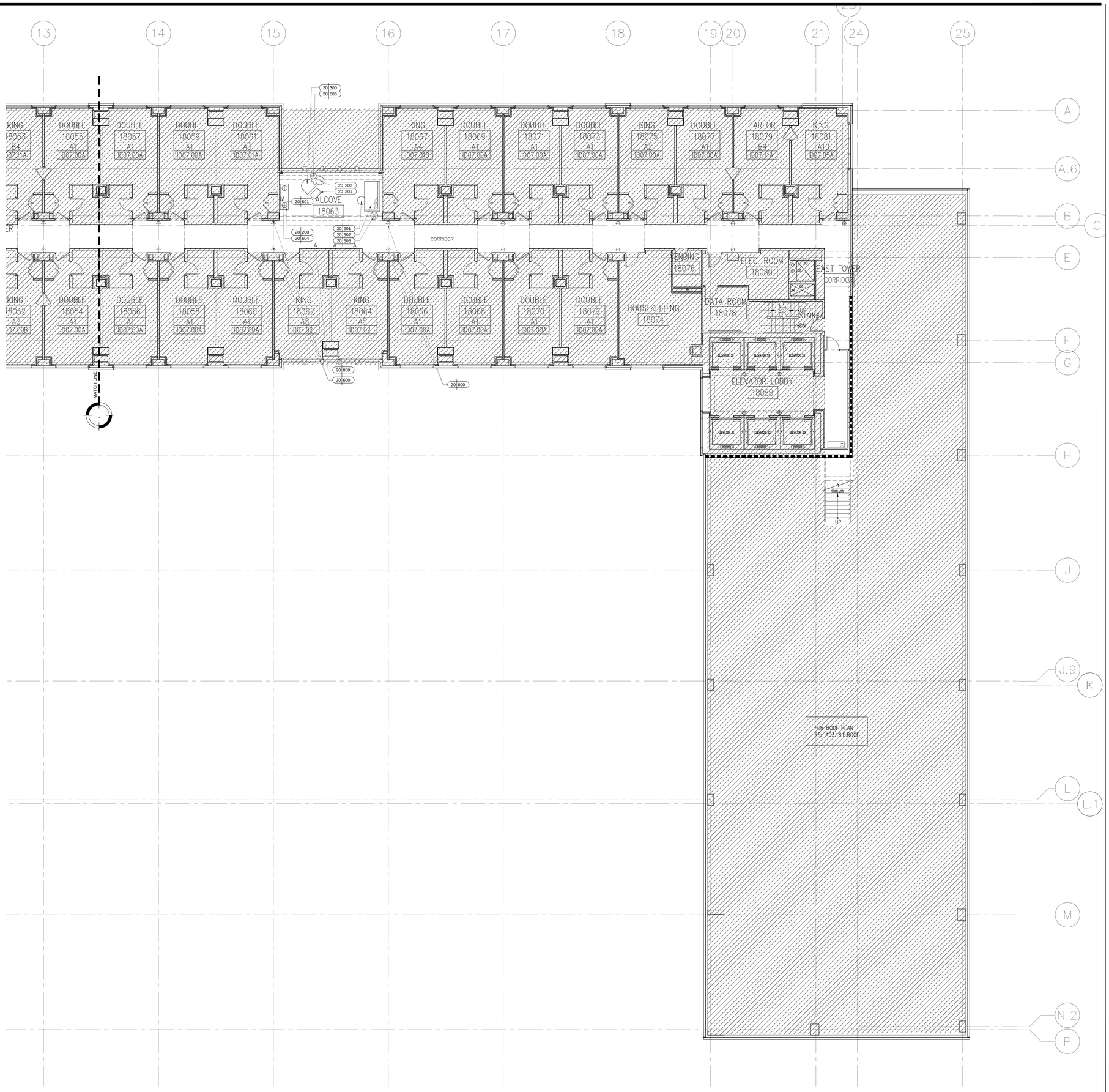

1 CORRIDOR FURNISHING PLAN LEVEL 18
Scale: 1/8"=1'-0"

KEY NOTES

SHEET NOTES

HILTON AMERICAS CONVENTION CENTER HOTEL

OWNER:
HOUSTON CONVENTION CENTER HOTEL CORPORATION
DEVELOPMENT MANAGER:

Two Houston Center
909 Fannin, Suite 3210
Houston TX 77010
Telephone 713.437.6898
Facsimile 713.437.6938

INTERIOR ARCHITECT:
Wilson Associates
Interior Architectural Design

3811 Turtle Creek Blvd.
16th Floor Dallas, Texas
75219 Tel (214) 521-6753
Fax (214) 521-0207

Issue	Date & Issue Description	By	Check
-- --	-- -- / -- -- / -- --	-- --	-- --

Seal/Signature

REGISTERED INTERIOR DESIGNER CONSTANCE H. JACKSON 1433 STATE OF TEXAS

Constance H. Jackson 10-18-2018

Project Name
HILTON AMERICAS CONVENTION CENTER HOTEL

Project Number
4993

CAD File Name
ID.202.C18.E.DWG

Description
LEVEL 18 CORRIDOR – FURNISHING PLAN

Scale
0 2" 4" 8" 16"

ID.202C.C18.E

©2001 Gensler

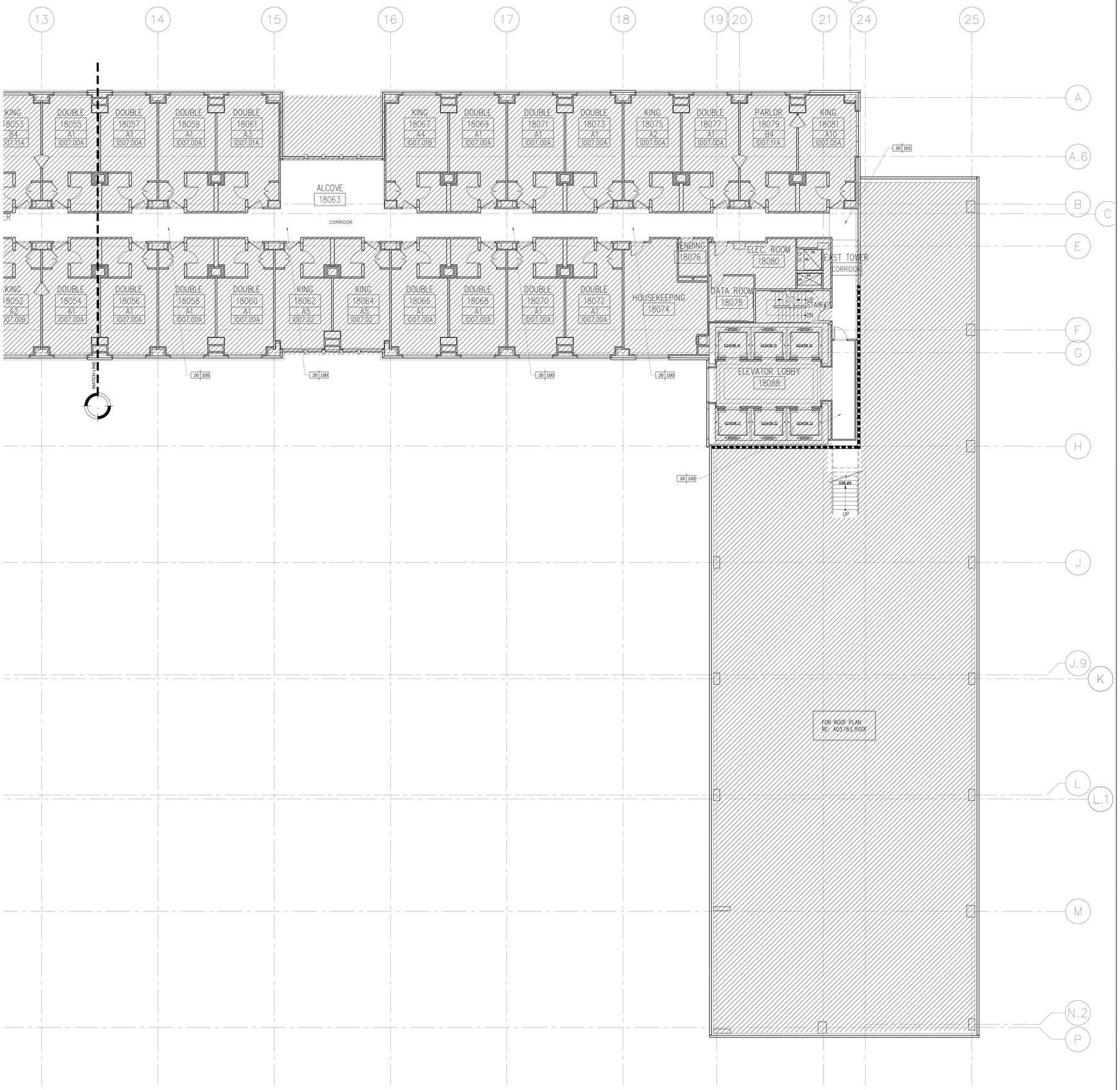

1 CORRIDOR FLOOR FINISH PLAN LEVEL 18
Scale: 1/8"=1'-0"

KEY NOTES

SHEET NOTES

HILTON AMERICAS CONVENTION CENTER HOTEL

OWNER:

HOUSTON CONVENTION CENTER HOTEL CORPORATION

Two Houston Center
909 Fannin, Suite 3210
Houston TX 77010
Telephone 713.437.6898
Facsimile 713.437.6938

DEVELOPMENT MANAGER:

INTERIOR ARCHITECT:

Wilson Associates
Interior Architectural Design

3811 Turtle Creek Blvd.
16th Floor Dallas, Texas
75219 Tel (214) 521-6753
Fax (214) 521-0207

Issue	Date & Issue Description	By	Check
-- --	-- -- / -- -- / -- --	-- --	-- --

Seal/Signature

REGISTERED INTERIOR DESIGNER CONSTANCE H. JACKSON 1433 STATE OF TEXAS

Constance H. Jackson 10-18-2018

Project Name

HILTON AMERICAS CONVENTION CENTER HOTEL

Project Number

4993

CAD File Name

ID.202.C18.E.DWG

Description

LEVEL 18 CORRIDOR – FLOOR FINISH PLAN

Scale

0 2" 4" 8" 16"

ID.202D.C18.E

©2001 Gensler

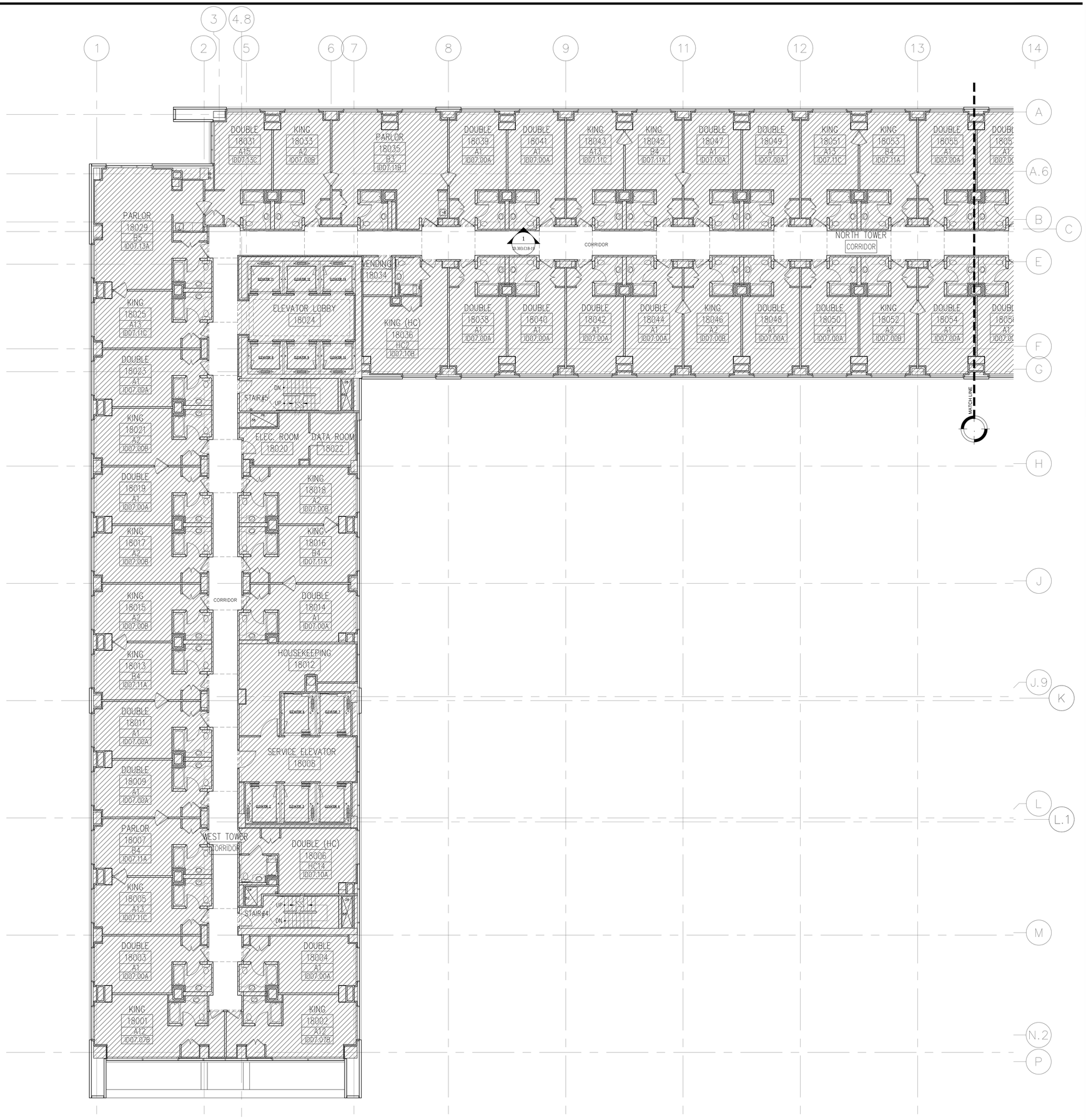

1 CORRIDOR FLOOR PLAN LEVEL 18
Scale: 1/8"=1'-0"

KEY NOTES

SHEET NOTES

HILTON AMERICAS CONVENTION CENTER HOTEL

OWNER:
HOUSTON CONVENTION CENTER HOTEL CORPORATION
DEVELOPMENT MANAGER:
Two Houston Center
909 Fannin, Suite 3210
Houston TX 77010
Telephone 713.437.6898
Facsimile 713.437.6938

INTERIOR ARCHITECT:
Wilson Associates
Interior Architectural Design
3811 Turtle Creek Blvd.
16th Floor Dallas, Texas
75219 Tel (214) 521-6753
Fax (214) 521-0207

Issue	Date & Issue Description	By	Check
--	--/--/--	--	--

Seal/Signature

REGISTERED INTERIOR DESIGNER CONSTANCE H. GAULSON 1433 STATE OF TEXAS
10-18-2018

Project Name
HILTON AMERICAS CONVENTION CENTER HOTEL

Project Number
4993

CAD File Name
ID.202.C18.W.DWG

Description
LEVEL 18 CORRIDOR - FLOOR PLAN

Scale
0 2" 4" 8" 16"

ID.202.C18.W

©2001 Gensler

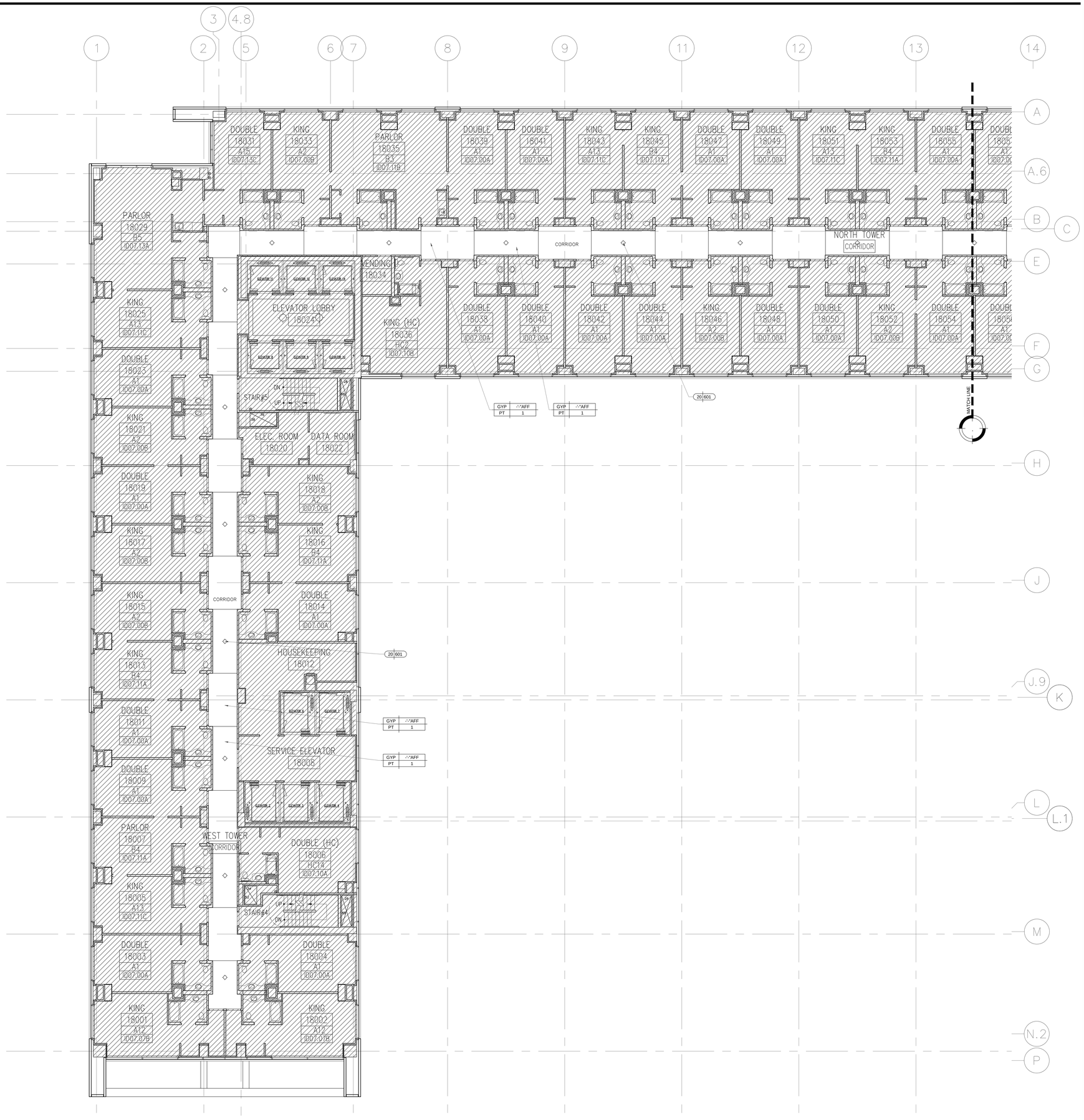

1 CORRIDOR REFLECTED CEILING PLAN LEVEL 18
Scale: 1/8"=1'-0"

KEY NOTES

SHEET NOTES

HILTON AMERICAS CONVENTION CENTER HOTEL

OWNER:
HOUSTON CONVENTION CENTER HOTEL CORPORATION
Two Houston Center
909 Fannin, Suite 3210
Houston TX 77010
Telephone 713.437.6898
Facsimile 713.437.6938

DEVELOPMENT MANAGER:

INTERIOR ARCHITECT:
Wilson Associates
Interior Architectural Design
3811 Turtle Creek Blvd.
16th Floor Dallas, Texas
75219 Tel (214) 521-6753
Fax (214) 521-0207

Issue	Date & Issue Description	By	Check
--	-- / -- / --	--	--

Seal/Signature

REGISTERED INTERIOR DESIGNER CONSTANCE H. GAULTON 1433 STATE OF TEXAS
10-18-2018

Project Name
HILTON AMERICAS CONVENTION CENTER HOTEL

Project Number
4993

CAD File Name
ID.202.C18.W.DWG

Description
LEVEL 18 CORRIDOR – REFLECTED CEILING PLAN

Scale
0 2" 4" 8" 16"

ID.202A.C18.W

©2001 Gensler

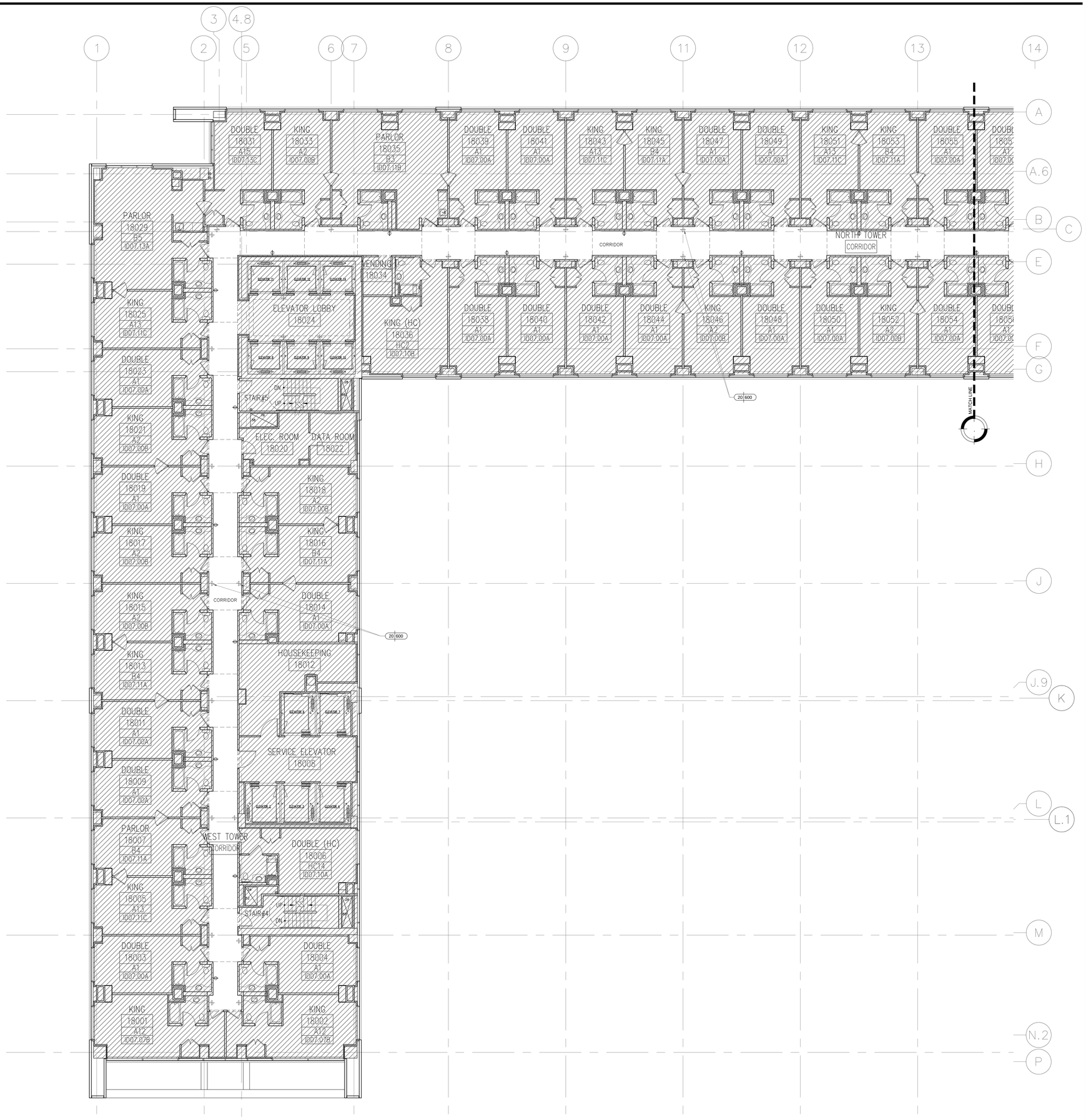

1 CORRIDOR ELECTRICAL PLAN LEVEL 18
Scale: 1/8"=1'-0"

KEY NOTES

SHEET NOTES

HILTON AMERICAS CONVENTION CENTER HOTEL

OWNER:
HOUSTON CONVENTION CENTER HOTEL CORPORATION
DEVELOPMENT MANAGER:

Two Houston Center
909 Fannin, Suite 3210
Houston TX 77010
Telephone 713.437.6898
Facsimile 713.437.6938

INTERIOR ARCHITECT:
Wilson Associates
Interior Architectural Design

3811 Turtle Creek Blvd.
16th Floor Dallas, Texas
75219 Tel (214) 521-6753
Fax (214) 521-0207

Issue	Date & Issue Description	By	Check
--	-- -- / -- -- / -- --	--	--

Seal/Signature

REGISTERED INTERIOR DESIGNER COMPLIANCE PLAN REGISTRATION 1433 STATE OF TEXAS

Constance H. Jackson 10-18-2018

Project Name
HILTON AMERICAS CONVENTION CENTER HOTEL

Project Number
4993

CAD File Name
ID.202.C18.W.DWG

Description
LEVEL 18 CORRIDOR – ELECTRICAL PLAN

Scale
0 2" 4" 8" 16"

ID.202B.C18.W

© 2001 Gensler

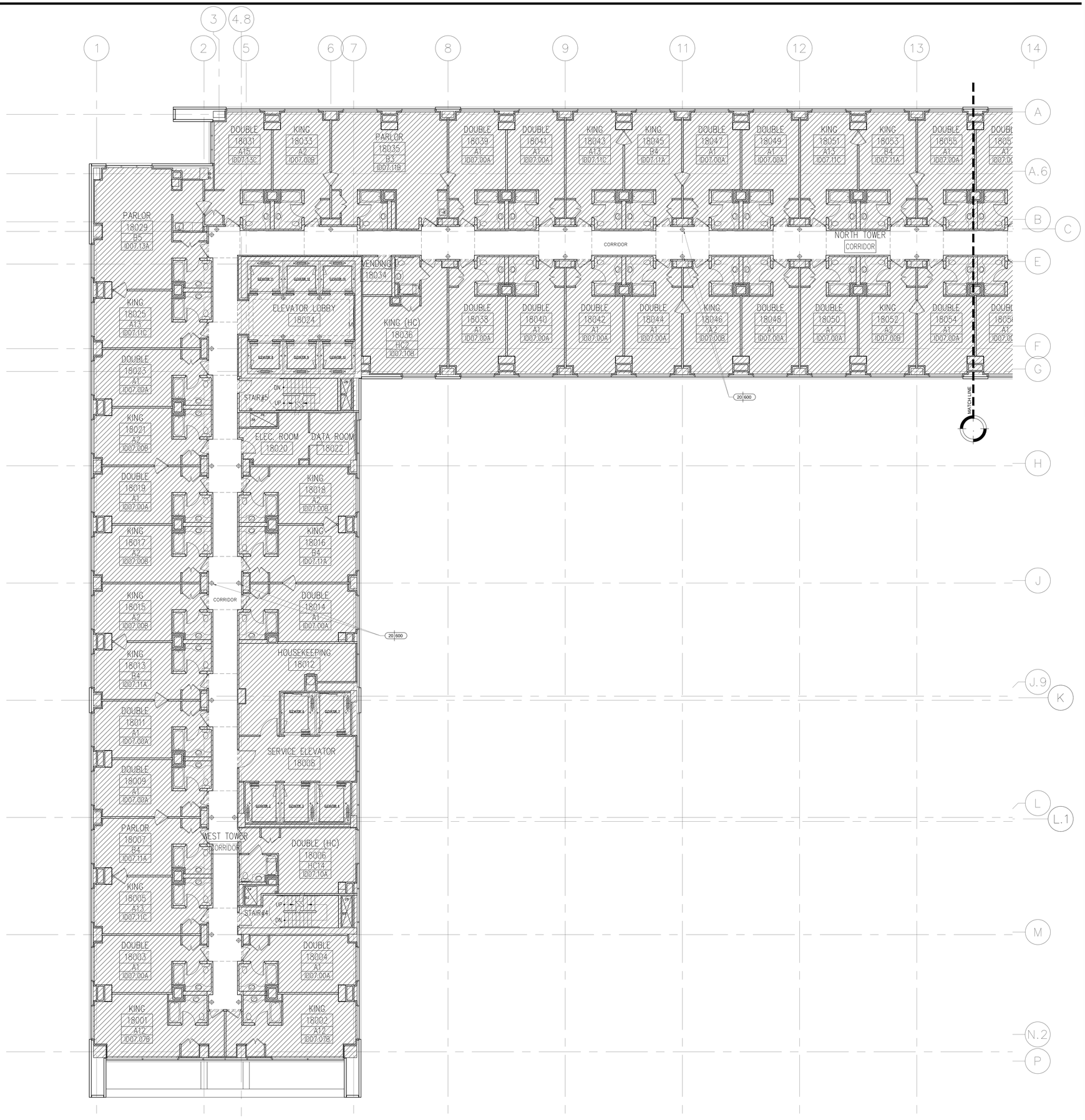

1 CORRIDOR FURNISHING PLAN LEVEL 18
Scale: 1/8"=1'-0"

KEY NOTES

SHEET NOTES

HILTON AMERICAS CONVENTION CENTER HOTEL

OWNER:
HOUSTON CONVENTION CENTER HOTEL CORPORATION
DEVELOPMENT MANAGER:

Two Houston Center
909 Fannin, Suite 3210
Houston TX 77010
Telephone 713.437.6898
Facsimile 713.437.6938

INTERIOR ARCHITECT:
Wilson Associates
Interior Architectural Design

3811 Turtle Creek Blvd.
16th Floor Dallas, Texas
75219 Tel (214) 521-6753
Fax (214) 521-0207

Issue	Date & Issue Description	By	Check
--	-- -- / -- -- / -- --	--	--

Seal/Signature

REGISTERED INTERIOR DESIGNER CONSTANCE H. JACKSON 1433 STATE OF TEXAS

Constance H. Jackson 10-18-2018

Project Name
HILTON AMERICAS CONVENTION CENTER HOTEL

Project Number
4993

CAD File Name
ID.202.C18.W.DWG

Description
LEVEL 18 CORRIDOR - FURNISHING PLAN

Scale
0 2" 4" 8" 16"

ID.202C.C18.W

© 2001 Gensler

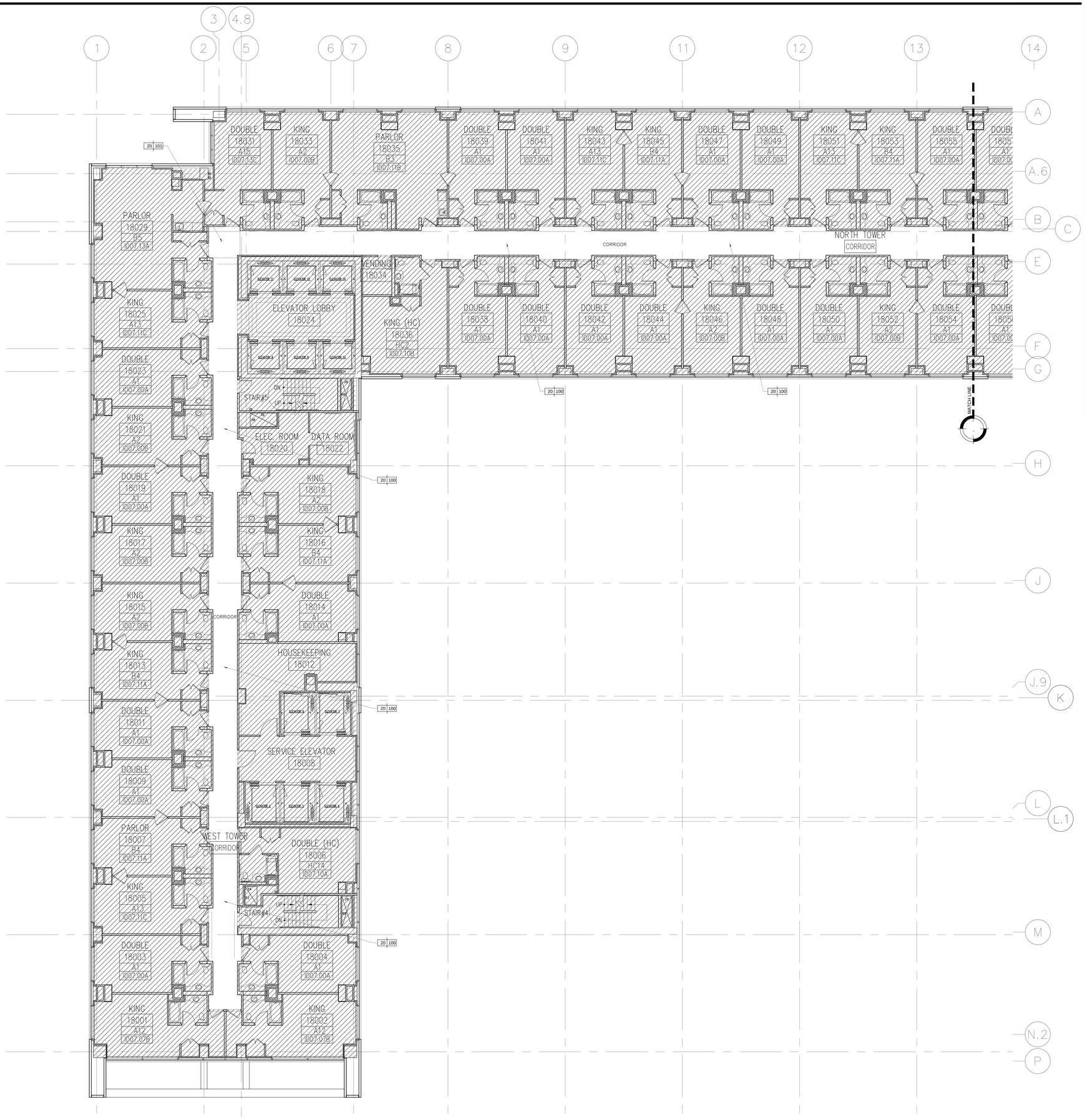

1 CORRIDOR FLOOR FINISH PLAN LEVEL 18
Scale: 1/8"=1'-0"

KEY NOTES

SHEET NOTES

HILTON AMERICAS CONVENTION CENTER HOTEL

OWNER:
HOUSTON CONVENTION CENTER HOTEL CORPORATION
DEVELOPMENT MANAGER:

Two Houston Center
909 Fannin, Suite 3210
Houston TX 77010
Telephone 713.437.6898
Facsimile 713.437.6938

INTERIOR ARCHITECT:
Wilson Associates
Interior Architectural Design

3811 Turtle Creek Blvd.
16th Floor Dallas, Texas
75219 Tel (214) 521-6753
Fax (214) 521-0207

Issue	Date & Issue Description	By	Check
--	-- -- / -- -- / -- --	--	--

Seal/Signature

REGISTERED INTERIOR DESIGNER CONSTANCE H. JACKSON 1433 STATE OF TEXAS

Constance H. Jackson 10-18-2018

Project Name
HILTON AMERICAS CONVENTION CENTER HOTEL

Project Number
4993

CAD File Name
ID.202.C18.W.DWG

Description
LEVEL 18 CORRIDOR - FLOOR FINISH PLAN

Scale
0 2" 4" 8" 16"

ID.202D.C18.W

© 2001 Gensler

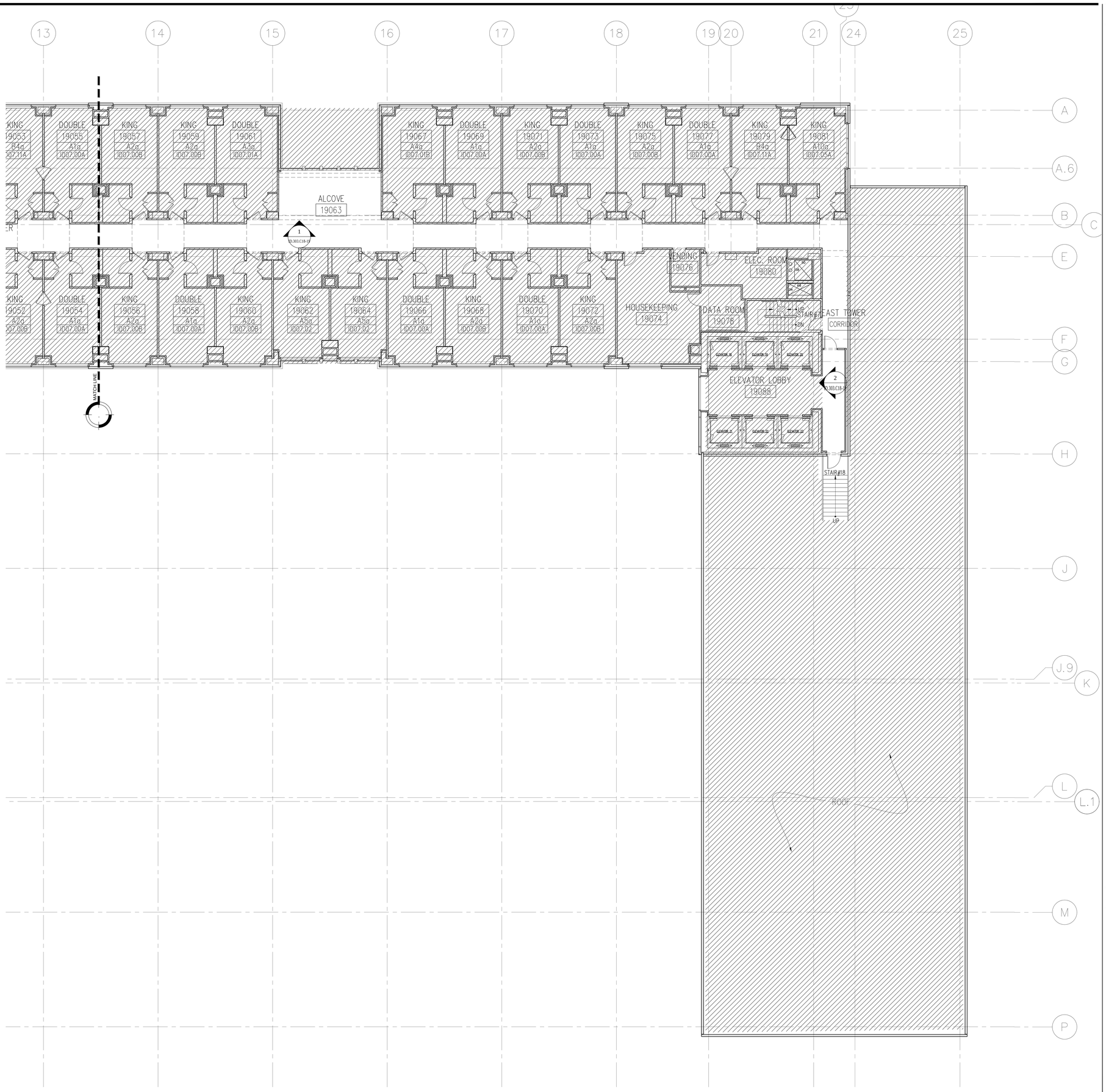

1 CORRIDOR FLOOR PLAN LEVEL 19
Scale: 1/8"=1'-0"

KEY NOTES

SHEET NOTES

HILTON AMERICAS CONVENTION CENTER HOTEL

OWNER:
HOUSTON CONVENTION CENTER HOTEL CORPORATION
DEVELOPMENT MANAGER:
Two Houston Center
909 Fannin, Suite 3210
Houston TX 77010
Telephone 713.437.6898
Facsimile 713.437.6938

INTERIOR ARCHITECT:
Wilson Associates
Interior Architectural Design
3811 Turtle Creek Blvd.
16th Floor Dallas, Texas
75219 Tel (214) 521-6753
Fax (214) 521-0207

Issue	Date & Issue Description	By	Check
-- --	-- -- / -- -- / -- --	-- --	-- --

Seal/Signature

REGISTERED INTERIOR DESIGNER CONSTANCE H. JACKSON 1433 STATE OF TEXAS

Constance H. Jackson 10-18-2018

Project Name
HILTON AMERICAS CONVENTION CENTER HOTEL

Project Number
4993

CAD File Name
ID.203.C19.E.DWG

Description
LEVEL 19 CORRIDOR - FLOOR PLAN

Scale
0 2" 4" 8" 16"

ID.203.C19.E

©2001 Gensler

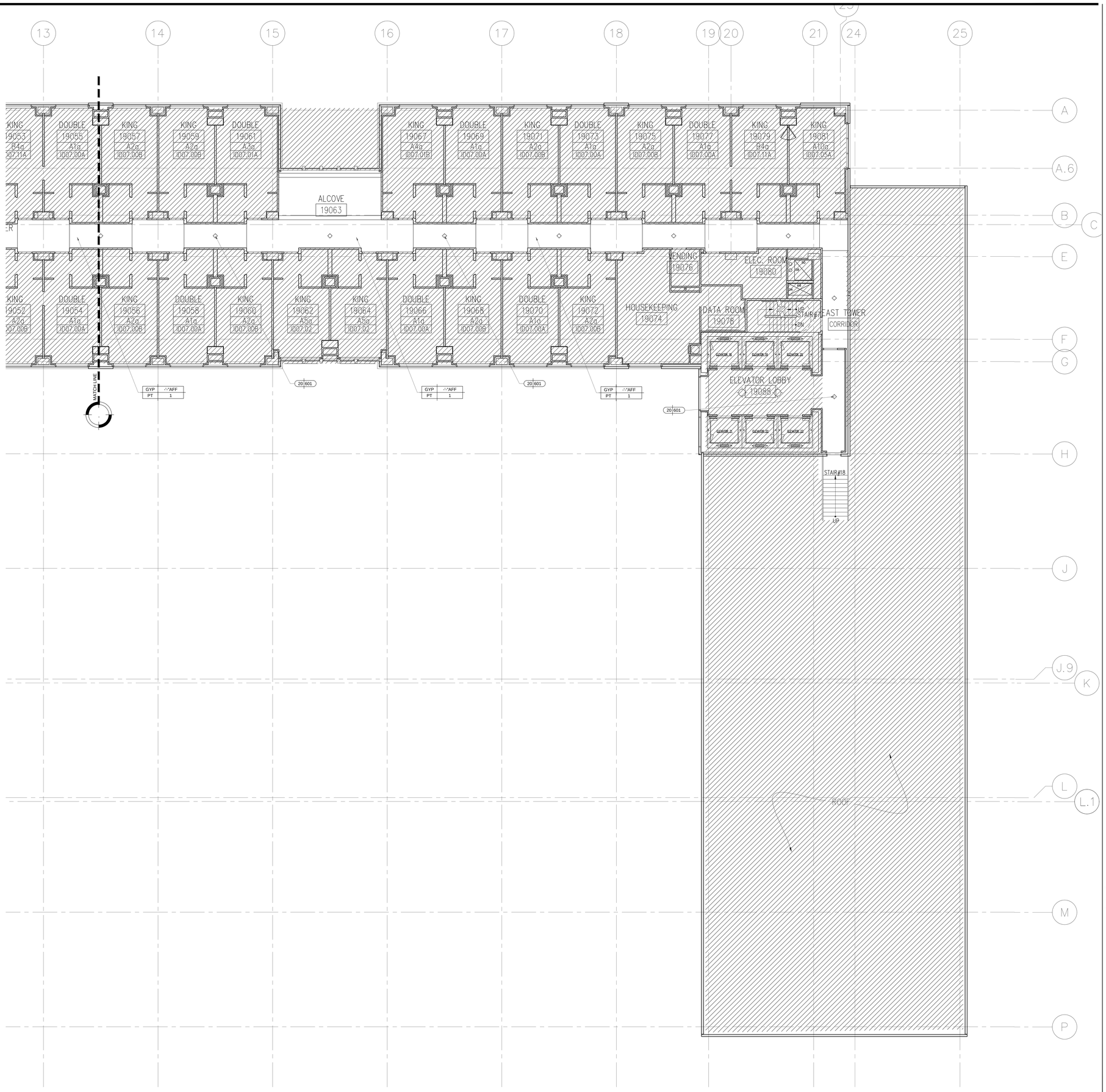

1 CORRIDOR REFLECTED CEILING PLAN LEVEL 19
Scale: 1/8"=1'-0"

KEY NOTES

SHEET NOTES

HILTON AMERICAS CONVENTION CENTER HOTEL

OWNER:

HOUSTON CONVENTION CENTER HOTEL CORPORATION

Two Houston Center
909 Fannin, Suite 3210
Houston TX 77010
Telephone 713.437.6898
Facsimile 713.437.6938

DEVELOPMENT MANAGER:

INTERIOR ARCHITECT:

Wilson Associates
Interior Architectural Design

3811 Turtle Creek Blvd.
16th Floor Dallas, Texas
75219 Tel (214) 521-6753
Fax (214) 521-0207

Issue	Date & Issue Description	By	Check
-- --	-- -- / -- -- / -- --	-- --	-- --

Seal/Signature

REGISTERED INTERIOR DESIGNER CONSTANCE H. JACKSON 1433 STATE OF TEXAS

Constance H. Jackson 10-18-2018

Project Name
HILTON AMERICAS CONVENTION CENTER HOTEL

Project Number
4993

CAD File Name
ID.203.C19.E.DWG

Description
LEVEL 19 CORRIDOR – REFLEDCTED CEILING PLAN

Scale
0 2" 4" 8" 16"

ID.203A.C19.E

©2001 Gensler

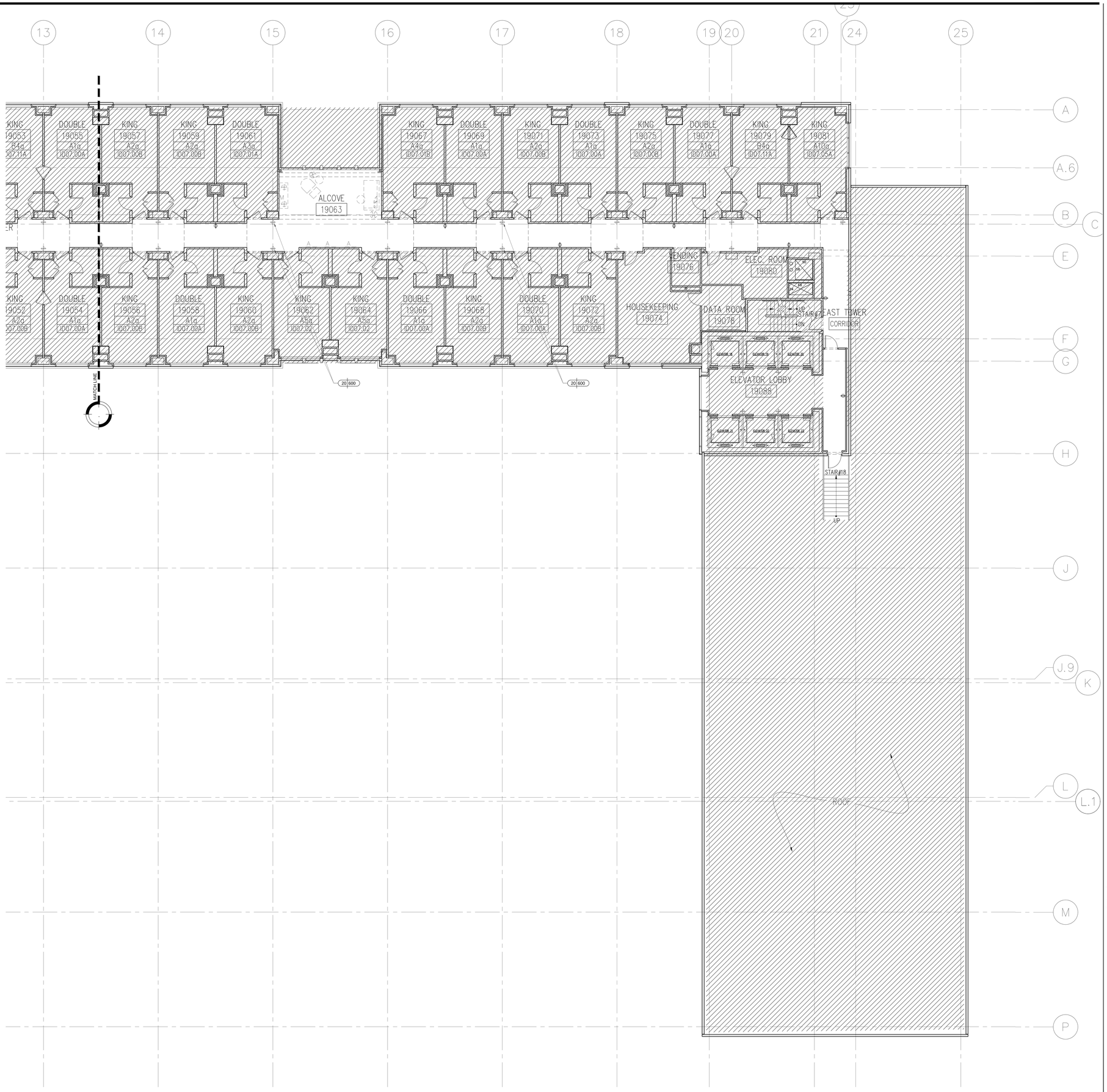

1 CORRIDOR ELECTRICAL PLAN LEVEL 19
Scale: 1/8"=1'-0"

KEY NOTES

SHEET NOTES

HILTON AMERICAS CONVENTION CENTER HOTEL

OWNER:
HOUSTON CONVENTION CENTER HOTEL CORPORATION
Two Houston Center
909 Fannin, Suite 3210
Houston TX 77010
Telephone 713.437.6898
Facsimile 713.437.6938

DEVELOPMENT MANAGER:

INTERIOR ARCHITECT:
Wilson Associates
Interior Architectural Design
3811 Turtle Creek Blvd.
16th Floor Dallas, Texas
75219 Tel (214) 521-6753
Fax (214) 521-0207

Issue	Date & Issue Description	By	Check
-- --	-- -- / -- -- / -- --	-- --	-- --

Seal/Signature

REGISTERED INTERIOR DESIGNER
LORRAINE H. JACKSON
1433
STATE OF TEXAS

Lorraine H. Jackson
10-18-2018

Project Name
HILTON AMERICAS CONVENTION CENTER HOTEL

Project Number
4993

CAD File Name
ID.203.C19.E.DWG

Description
LEVEL 19 CORRIDOR – ELECTRICAL PLAN

Scale
0 2" 4" 8" 16"

ID.203B.C19.E

©2001 Gensler

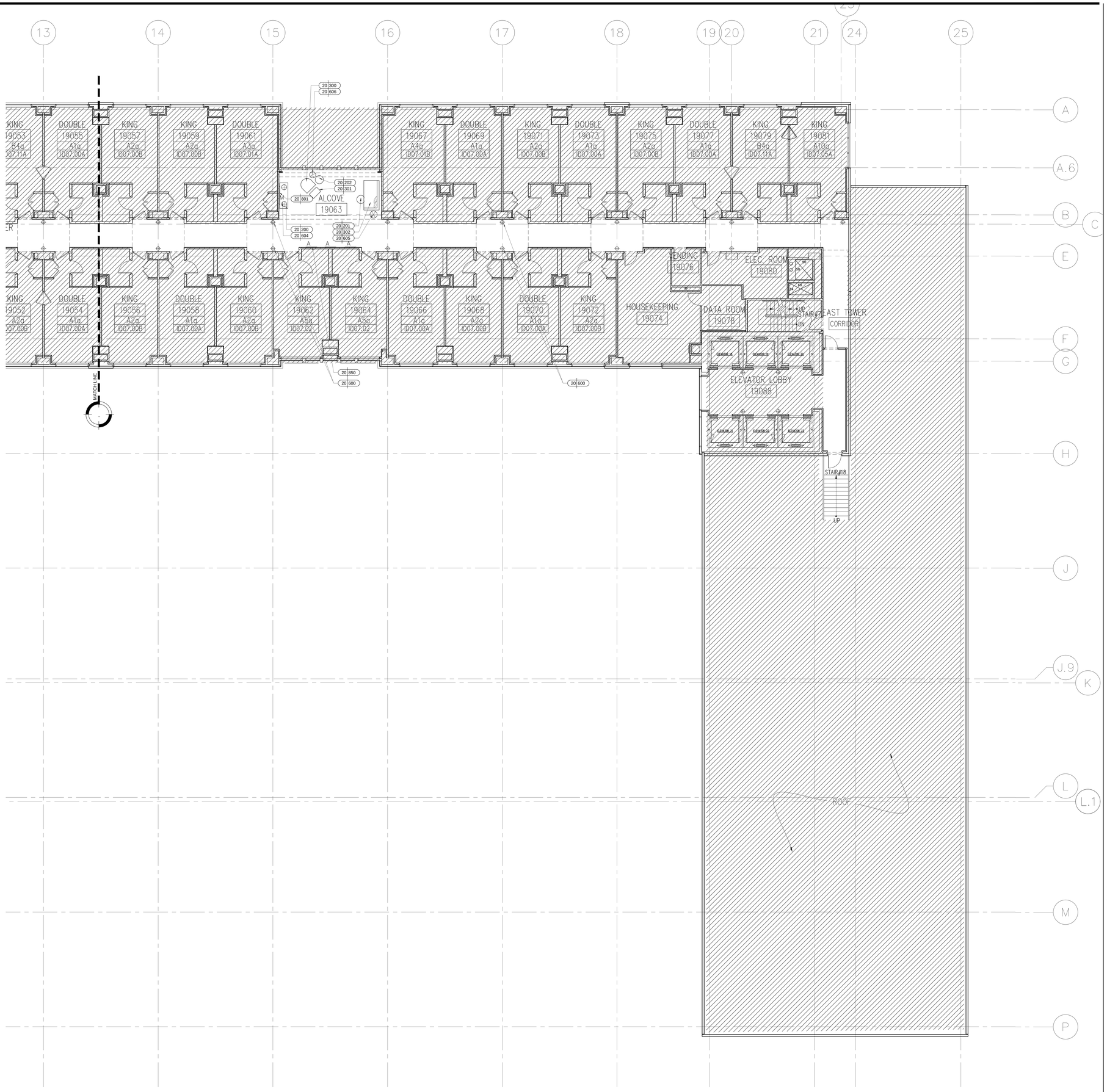

1 CORRIDOR FURNISHING PLAN LEVEL 19
Scale: 1/8"=1'-0"

KEY NOTES

SHEET NOTES

HILTON AMERICAS CONVENTION CENTER HOTEL

OWNER:

HOUSTON CONVENTION CENTER HOTEL CORPORATION

Two Houston Center
909 Fannin, Suite 3210
Houston TX 77010
Telephone 713.437.6898
Facsimile 713.437.6938

DEVELOPMENT MANAGER:

INTERIOR ARCHITECT:

Wilson Associates
Interior Architectural Design

3811 Turtle Creek Blvd.
16th Floor Dallas, Texas
75219 Tel (214) 521-6753
Fax (214) 521-0207

Issue	Date & Issue Description	By	Check
-- --	-- -- / -- -- / -- --	-- --	-- --

Seal/Signature

REGISTERED INTERIOR DESIGNER CONSTANCE H. JACKSON 1433 STATE OF TEXAS

Constance H. Jackson 10-18-2018

Project Name
HILTON AMERICAS CONVENTION CENTER HOTEL

Project Number
4993

CAD File Name
ID.203.C19.E.DWG

Description
LEVEL 19 CORRIDOR – FURNISHING PLAN

Scale
0 2" 4" 8" 16"

ID.203C.C19.E

©2001 Gensler

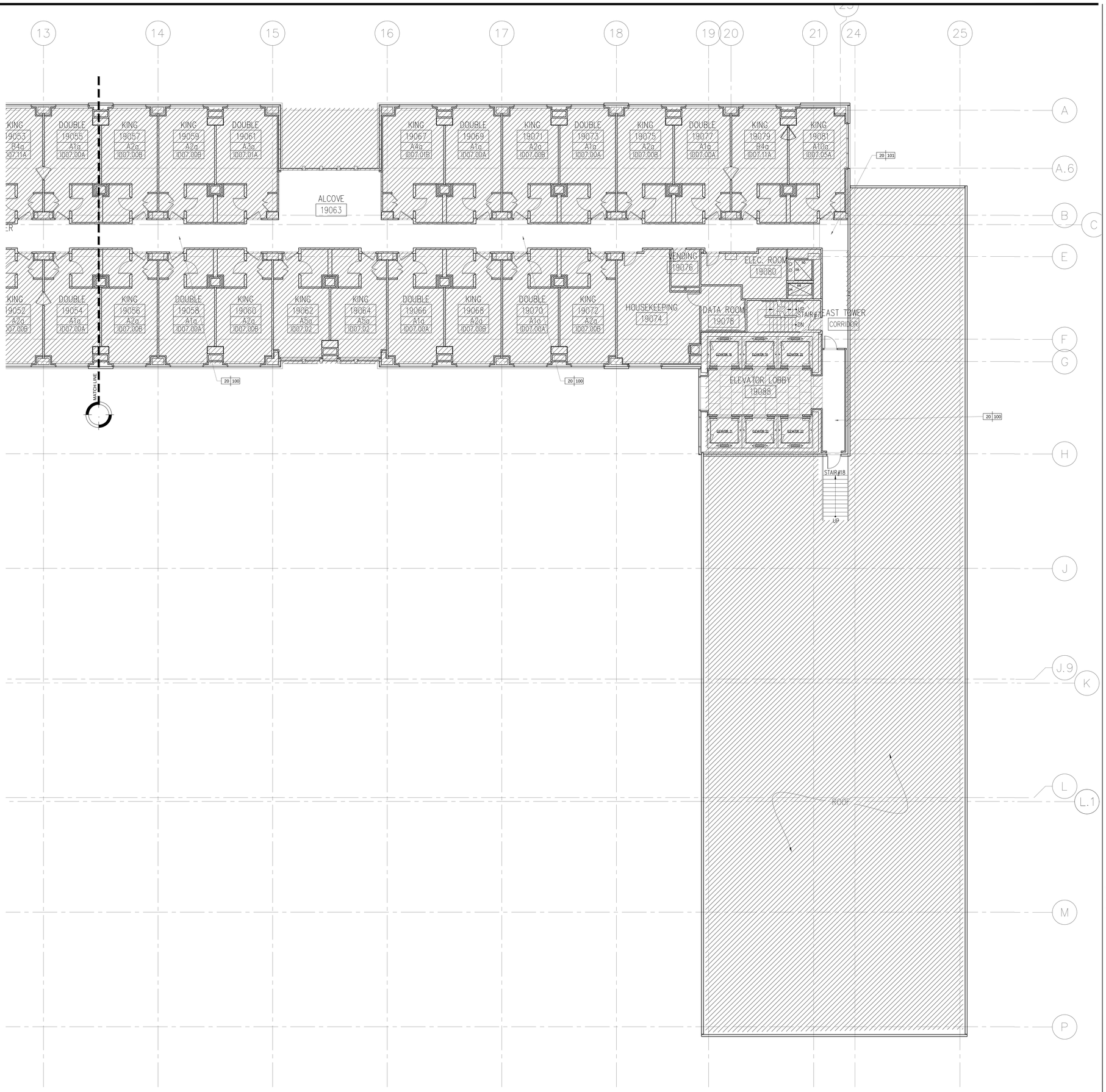

1 CORRIDOR FLOOR FINISH PLAN LEVEL 19
Scale: 1/8"=1'-0"

KEY NOTES

SHEET NOTES

HILTON AMERICAS CONVENTION CENTER HOTEL

OWNER:
HOUSTON CONVENTION CENTER HOTEL CORPORATION
Two Houston Center
909 Fannin, Suite 3210
Houston TX 77010
Telephone 713.437.6898
Facsimile 713.437.6938

DEVELOPMENT MANAGER:

INTERIOR ARCHITECT:
Wilson Associates
Interior Architectural Design
3811 Turtle Creek Blvd.
16th Floor Dallas, Texas
75219 Tel (214) 521-6753
Fax (214) 521-0207

Issue	Date & Issue Description	By	Check
-- --	-- -- / -- -- / -- --	-- --	-- --

Seal/Signature

REGISTERED INTERIOR DESIGNER
CONSTANCE H. JACKSON
1433
STATE OF TEXAS

Constance H. Jackson
10-18-2018

Project Name
HILTON AMERICAS CONVENTION CENTER HOTEL

Project Number
4993

CAD File Name
ID.203.C19.E.DWG

Description
LEVEL 19 CORRIDOR – FLOOR FINISH PLAN

Scale
0 2" 4" 8" 16"

ID.203D.C19.E

©2001 Gensler

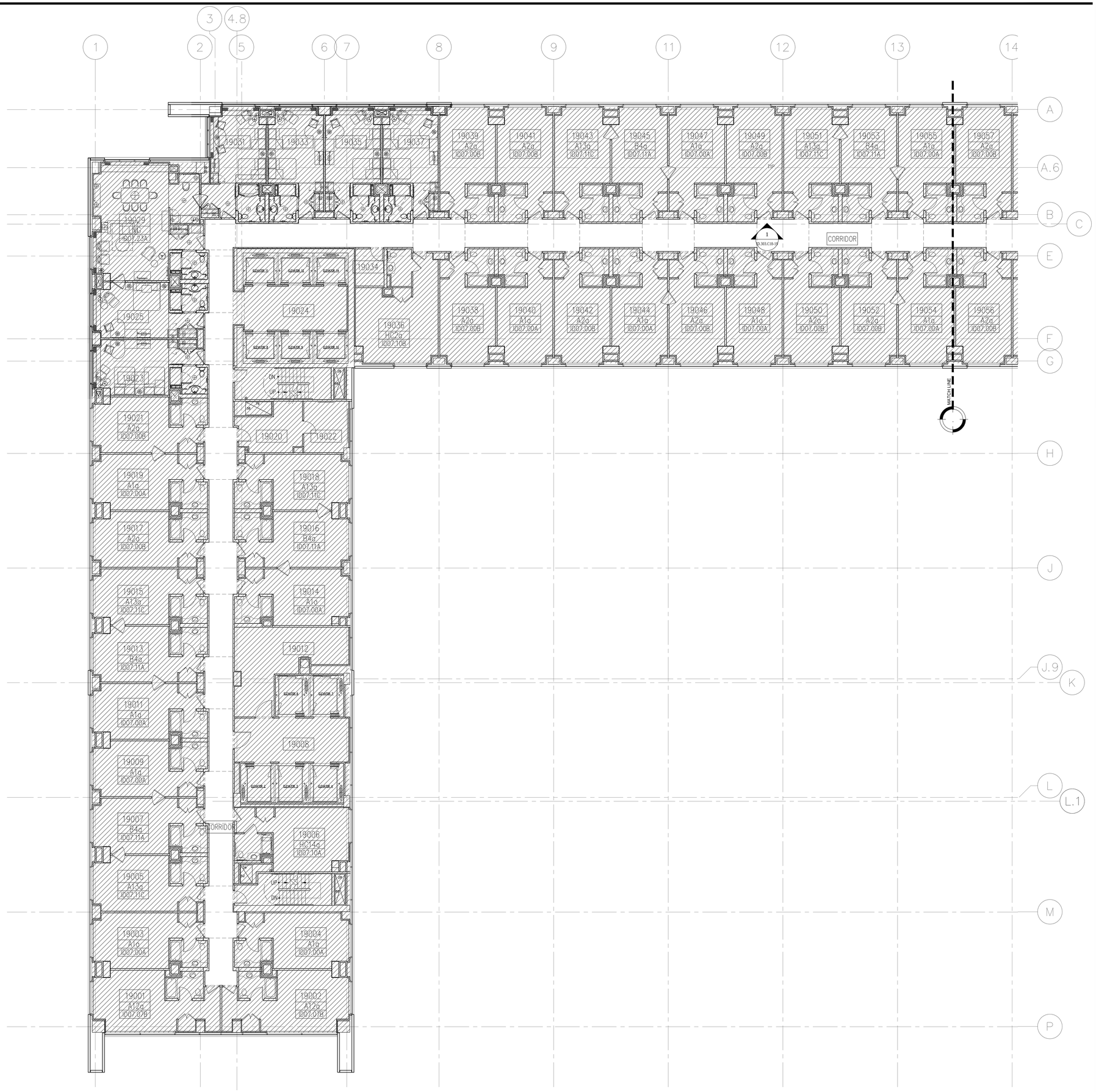

1 CORRIDOR FLOOR PLAN LEVEL 19
Scale: 1/8"=1'-0"

KEY NOTES

SHEET NOTES

HILTON AMERICAS CONVENTION CENTER HOTEL

OWNER:

HOUSTON CONVENTION CENTER HOTEL CORPORATION

Two Houston Center
909 Fannin, Suite 3210
Houston TX 77010
Telephone 713.437.6898
Facsimile 713.437.6938

DEVELOPMENT MANAGER:

INTERIOR ARCHITECT:

Wilson Associates
Interior Architectural Design

3811 Turtle Creek Blvd.
16th Floor Dallas, Texas
75219 Tel (214) 521-6753
Fax (214) 521-0207

Issue	Date & Issue Description	By	Check
--	--/--/--	--	--

Seal/Signature

REGISTERED INTERIOR DESIGNER
CONSTANCE H. JACKSON
1433
STATE OF TEXAS

Constance H. Jackson
10-18-2018

Project Name

HILTON AMERICAS
CONVENTION CENTER HOTEL

Project Number

4993

CAD File Name

ID.203.C19.W.DWG

Description

LEVEL 19 CORRIDOR – FLOOR PLAN

Scale

0 2" 4" 8" 16"

ID.203.C19.W

©2001 Gensler

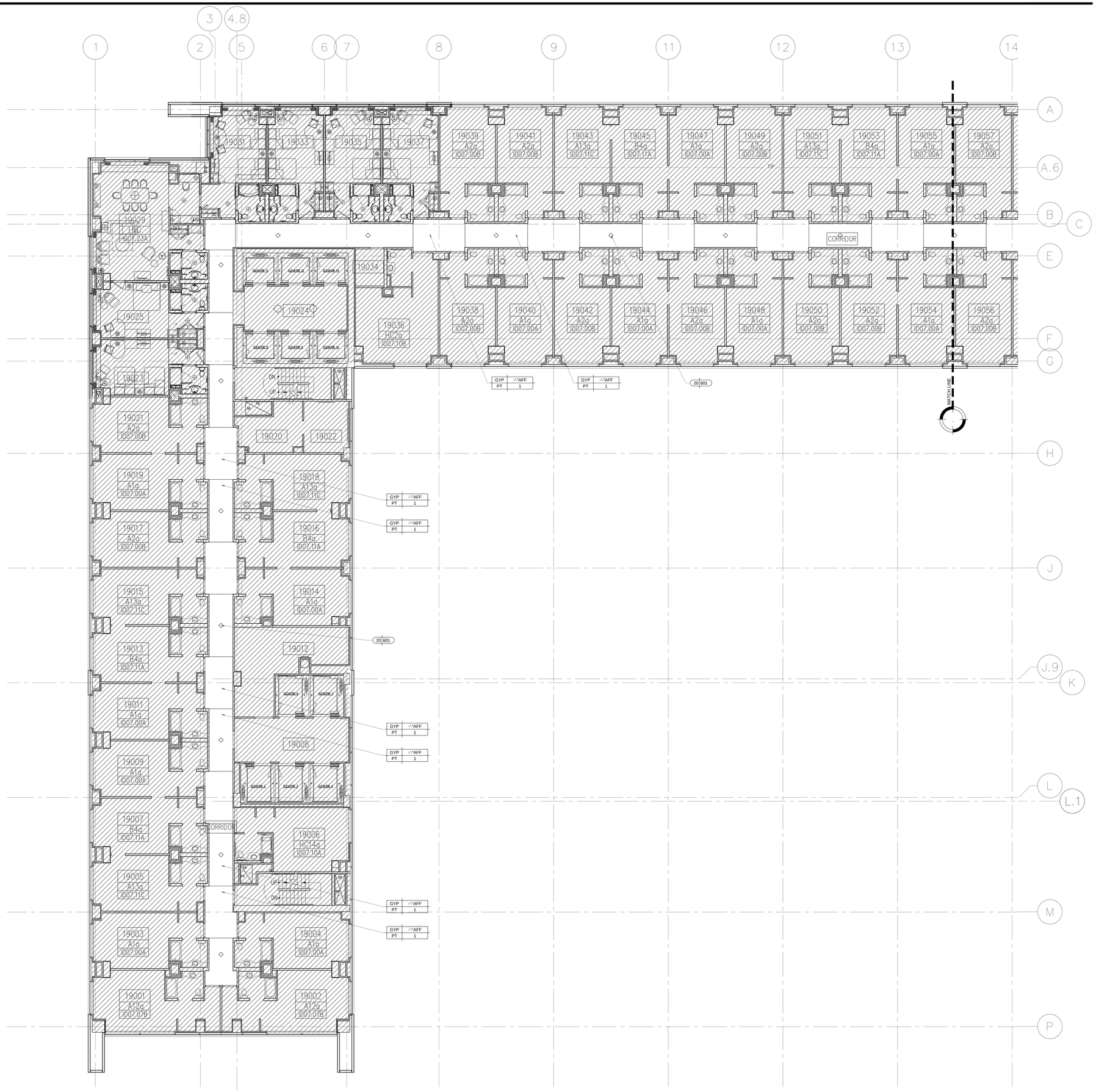

1 CORRIDOR REFLECTED CEILING PLAN LEVEL 19
Scale: 1/8"=1'-0"

KEY NOTES

SHEET NOTES

HILTON AMERICAS CONVENTION CENTER HOTEL

OWNER:

HOUSTON CONVENTION CENTER HOTEL CORPORATION

Two Houston Center
909 Fannin, Suite 3210
Houston TX 77010
Telephone 713.437.6898
Facsimile 713.437.6938

DEVELOPMENT MANAGER:

INTERIOR ARCHITECT:

Wilson Associates
Interior Architectural Design

3811 Turtle Creek Blvd.
16th Floor Dallas, Texas
75219 Tel (214) 521-6753
Fax (214) 521-0207

Issue	Date & Issue Description	By	Check
--	-- /-- /--	--	--

Seal/Signature

REGISTERED INTERIOR DESIGNER CONSTANCE H. JACKSON 1433 STATE OF TEXAS

10-18-2018

Project Name
HILTON AMERICAS CONVENTION CENTER HOTEL

Project Number
4993

CAD File Name
ID.203.C19.W.DWG

Description
LEVEL 19 CORRIDOR – REFLECTED CEILING PLAN

Scale
0 2" 4" 8" 16"

ID.203A.C19.W

©2001 Gensler

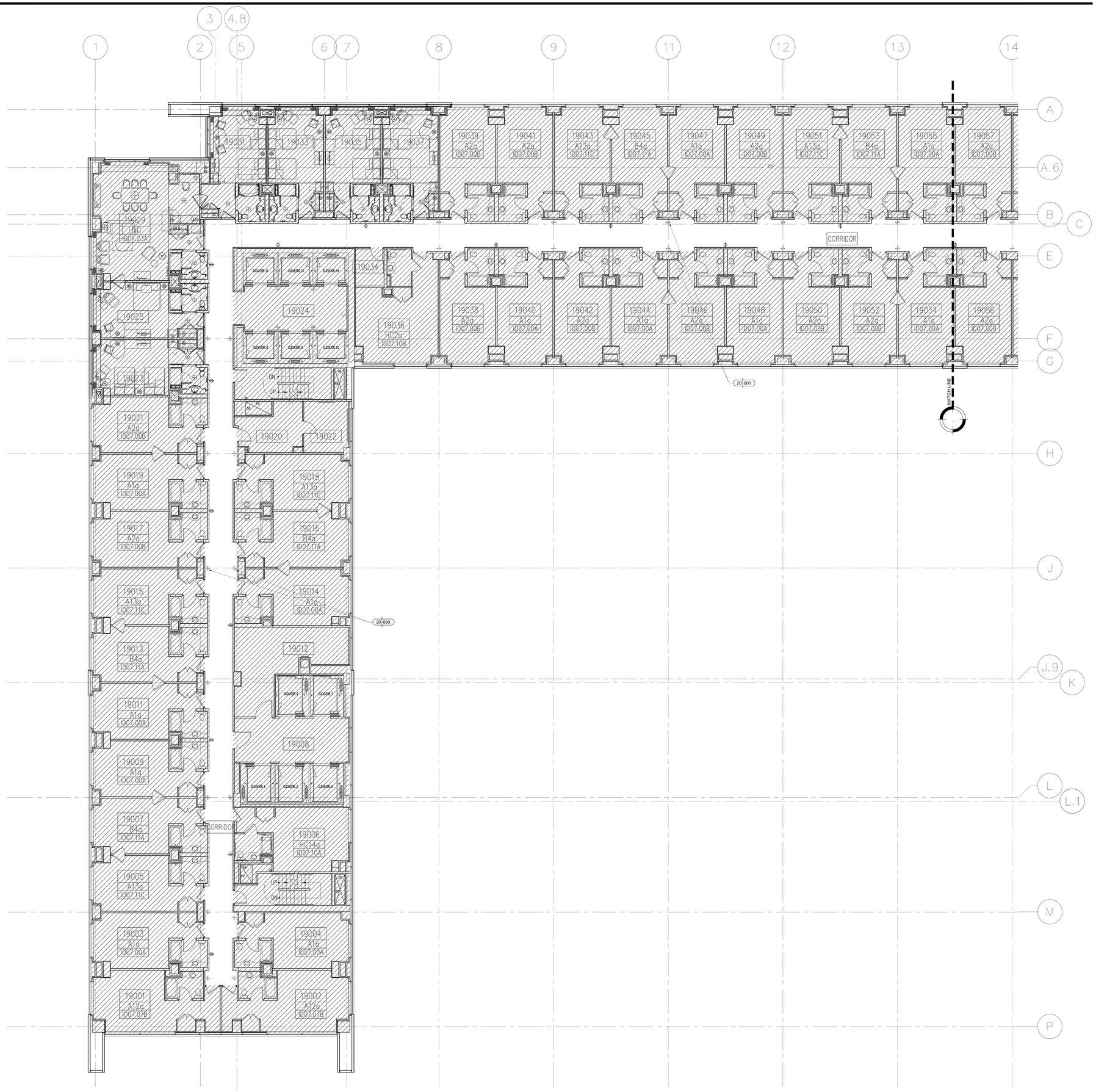

1 CORRIDOR ELECTRICAL PLAN LEVEL 19
Scale: 1/8"=1'-0"

KEY NOTES

SHEET NOTES

HILTON AMERICAS CONVENTION CENTER HOTEL

OWNER:

HOUSTON CONVENTION CENTER HOTEL CORPORATION

Two Houston Center
909 Fannin, Suite 3210
Houston TX 77010
Telephone 713.437.6898
Facsimile 713.437.6938

DEVELOPMENT MANAGER:

INTERIOR ARCHITECT:

Wilson Associates
Interior Architectural Design

3811 Turtle Creek Blvd.
16th Floor Dallas, Texas
75219 Tel (214) 521-6753
Fax (214) 521-0207

Issue	Date & Issue Description	By	Check
--	-- -- / -- -- / -- --	--	--

Seal/Signature

REGISTERED INTERIOR DESIGNER CONSTANCE H. JACKSON 1433 STATE OF TEXAS

10-18-2018

Project Name
HILTON AMERICAS CONVENTION CENTER HOTEL

Project Number
4993

CAD File Name
ID.203.C19.W.DWG

Description
LEVEL 19 CORRIDOR – ELECTRICAL PLAN

Scale
0 2" 4" 8" 16"

ID.203B.C19.W

©2001 Gensler

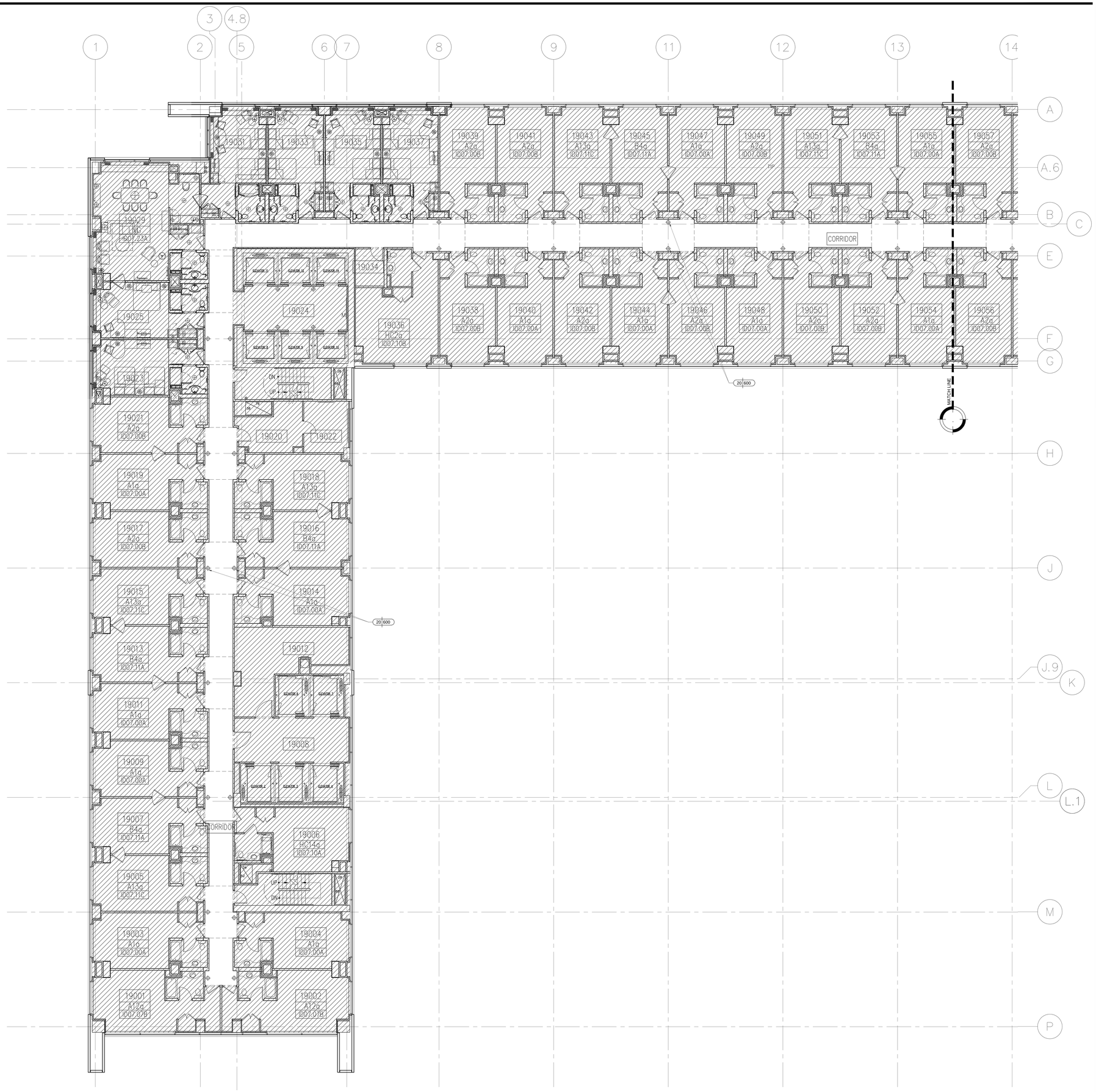

1 CORRIDOR FURNISHING PLAN LEVEL 19
Scale: 1/8"=1'-0"

KEY NOTES

SHEET NOTES

HILTON AMERICAS CONVENTION CENTER HOTEL

OWNER:

HOUSTON CONVENTION CENTER HOTEL CORPORATION

Two Houston Center
909 Fannin, Suite 3210
Houston TX 77010
Telephone 713.437.6898
Facsimile 713.437.6938

DEVELOPMENT MANAGER:

INTERIOR ARCHITECT:

Wilson Associates
Interior Architectural Design

3811 Turtle Creek Blvd.
16th Floor Dallas, Texas
75219 Tel (214) 521-6753
Fax (214) 521-0207

Issue	Date & Issue Description	By	Check
--	-- /-- /--	--	--

Seal/Signature

REGISTERED INTERIOR DESIGNER CONSTANCE H. JACKSON 1433 STATE OF TEXAS

Constance H. Jackson 10-18-2018

Project Name
HILTON AMERICAS CONVENTION CENTER HOTEL

Project Number
4993

CAD File Name
ID.203.C19.W.DWG

Description
LEVEL 19 CORRIDOR – FURNISHING PLAN

Scale
0 2" 4" 8" 16"

ID.203C.C19.W

©2001 Gensler

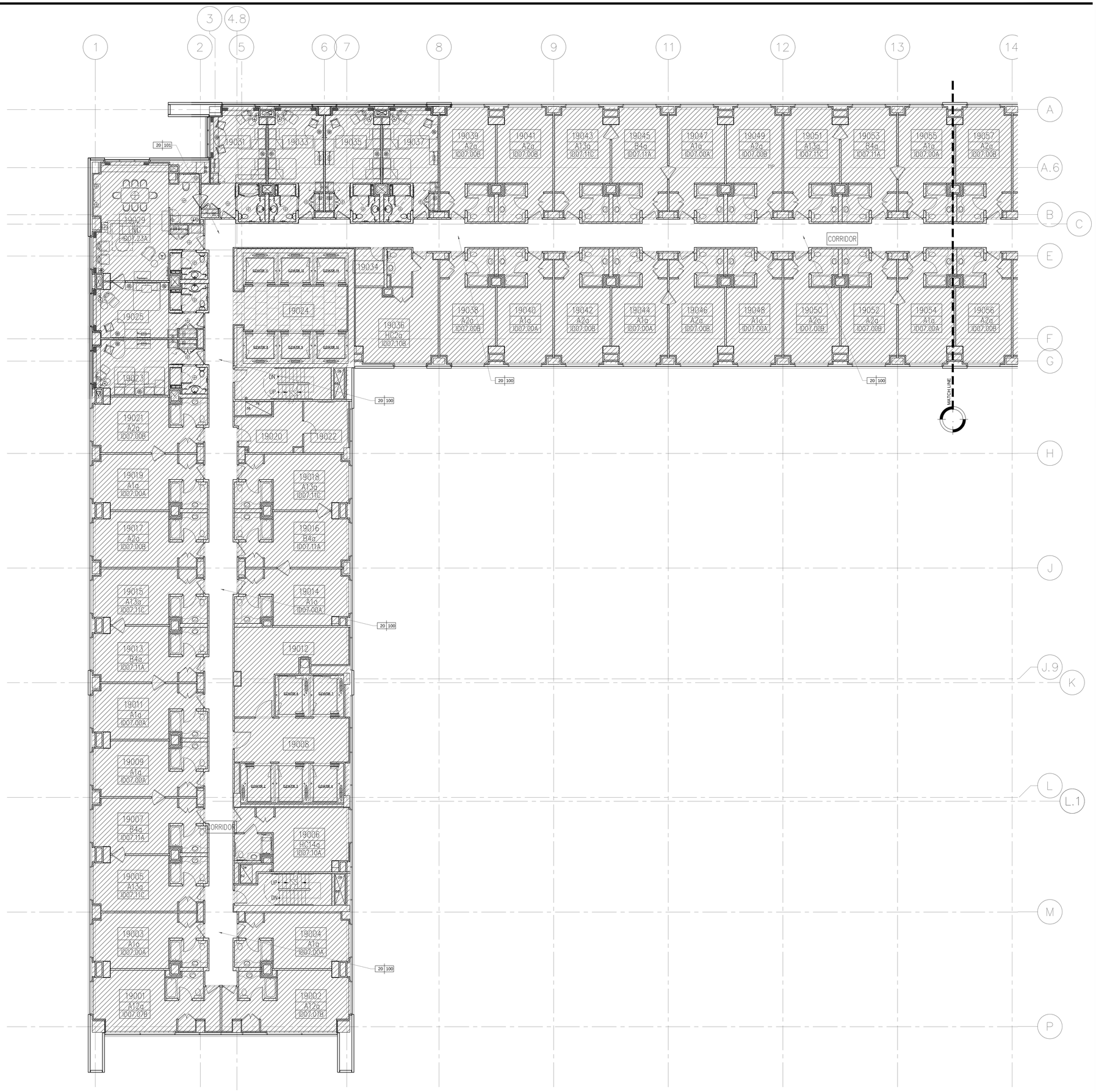

1 CORRIDOR FLOOR FINISH PLAN LEVEL 19
Scale: 1/8"=1'-0"

KEY NOTES

SHEET NOTES

HILTON AMERICAS CONVENTION CENTER HOTEL

OWNER:

HOUSTON CONVENTION CENTER HOTEL CORPORATION

DEVELOPMENT MANAGER:

Two Houston Center
909 Fannin, Suite 3210
Houston TX 77010
Telephone 713.437.6898
Facsimile 713.437.6938

INTERIOR ARCHITECT:

Wilson Associates
Interior Architectural Design

3811 Turtle Creek Blvd.
16th Floor Dallas, Texas
75219 Tel (214) 521-6753
Fax (214) 521-0207

Issue	Date & Issue Description	By	Check
--	-- -- / -- -- / -- --	--	--

Seal/Signature

REGISTERED INTERIOR DESIGNER
CONSTANCE H. JACKSON
1433
STATE OF TEXAS

Constance H. Jackson 10-18-2018

Project Name
HILTON AMERICAS CONVENTION CENTER HOTEL

Project Number
4993

CAD File Name
ID.203.C19.W.DWG

Description
LEVEL 19 CORRIDOR – FLOOR FINISH PLAN

Scale
0 2" 4" 8" 16"

ID.203D.C19.W

©2001 Gensler

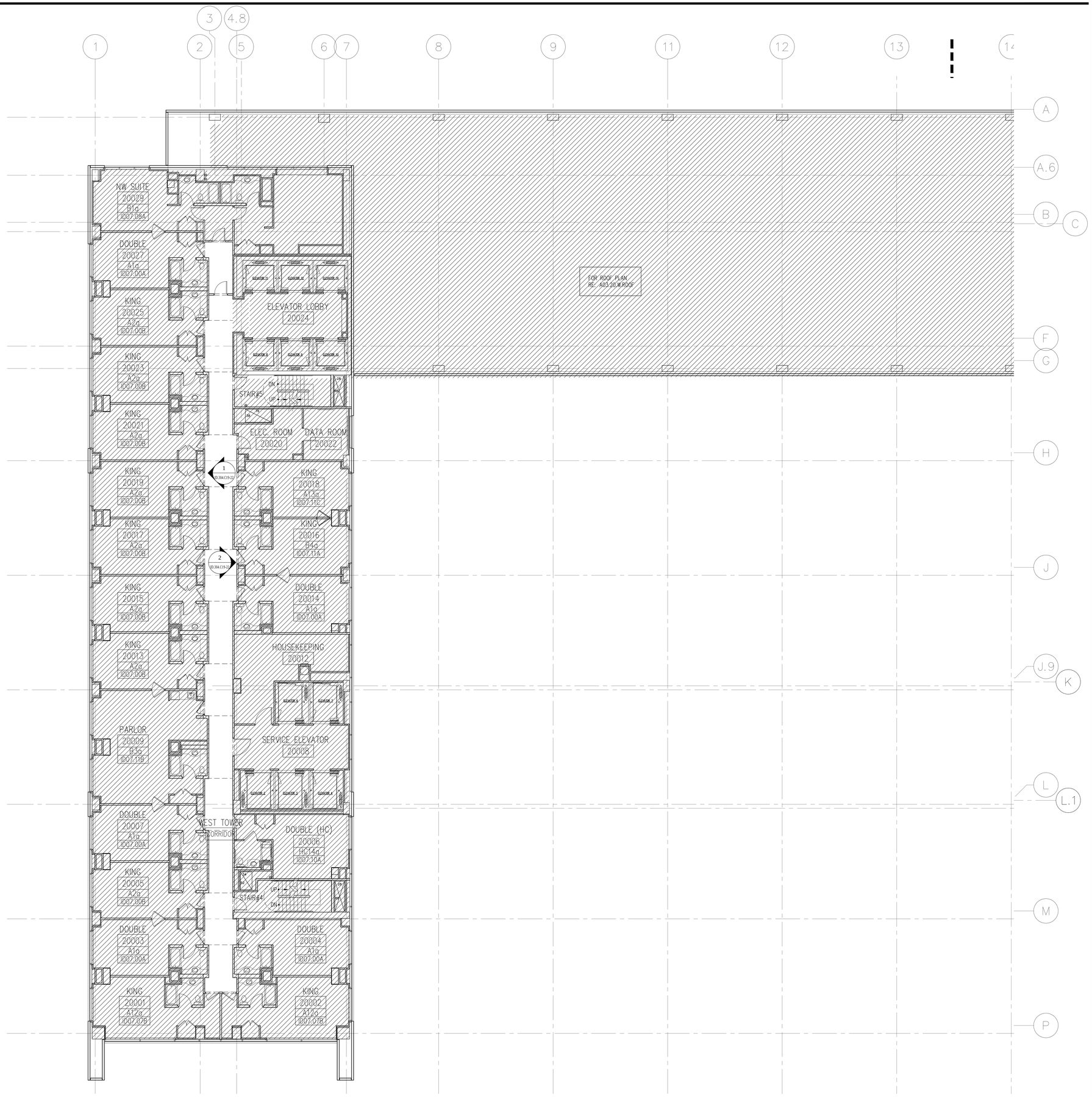

1 CORRIDOR FLOOR PLAN LEVEL 20
Scale: 1/8"=1'-0"

KEY NOTES

SHEET NOTES

HILTON AMERICAS CONVENTION CENTER HOTEL

OWNER:

HOUSTON CONVENTION CENTER HOTEL CORPORATION

Two Houston Center
909 Fannin, Suite 3210
Houston TX 77010
Telephone 713.437.6898
Facsimile 713.437.6938

DEVELOPMENT MANAGER:

INTERIOR ARCHITECT:

Wilson Associates
Interior Architectural Design

3811 Turtle Creek Blvd.
16th Floor Dallas, Texas
75219 Tel (214) 521-6753
Fax (214) 521-0207

△	Issue	Date & Issue Description	By	Check
	--	--/--/--	--	--

Seal/Signature

REGISTERED INTERIOR DESIGNER
CONSTANCE H. JACKSON
1432
STATE OF TEXAS

Constance H. Jackson
10-18-2018

Project Name
HILTON AMERICAS CONVENTION CENTER HOTEL

Project Number
4993

CAD File Name
ID.204.C20.DWG

Description
CORRIDOR FLOOR PLAN LEVEL-20

Scale
0 2" 4" 8" 16"

ID.204.C20

©2001 Gensler

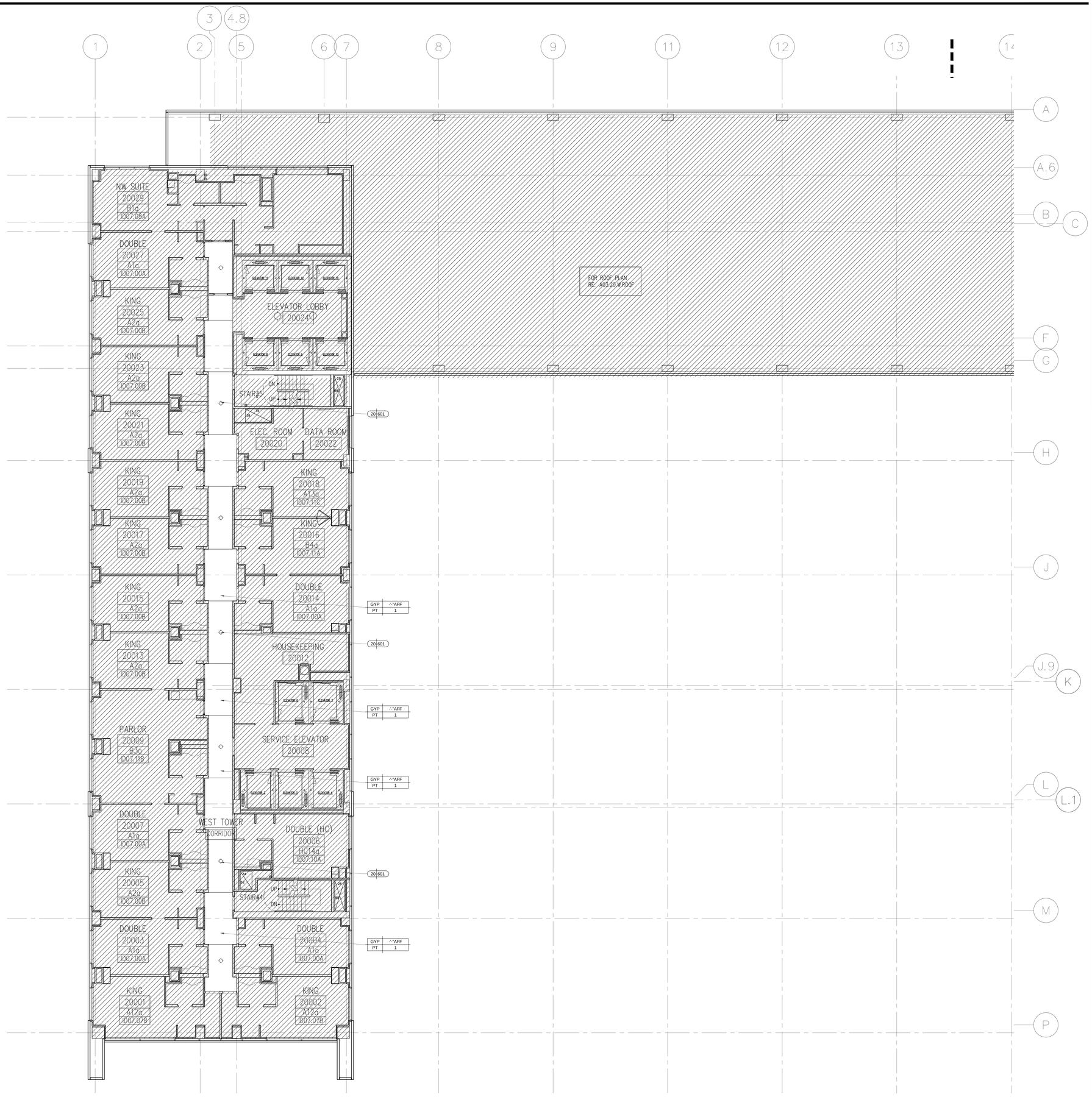

1 TYPICAL CORRIDOR REFLECTED CEILING PLAN LEVEL 20
Scale: 1/8"=1'-0"

KEY NOTES

SHEET NOTES

HILTON AMERICAS CONVENTION CENTER HOTEL

OWNER:

HOUSTON CONVENTION CENTER HOTEL CORPORATION

Two Houston Center
909 Fannin, Suite 3210
Houston TX 77010
Telephone 713.437.6898
Facsimile 713.437.6938

DEVELOPMENT MANAGER:

INTERIOR ARCHITECT:

Wilson Associates
Interior Architectural Design

3811 Turtle Creek Blvd.
16th Floor Dallas, Texas
75219 Tel (214) 521-6753
Fax (214) 521-0207

Issue	Date & Issue Description	By	Check
--	-- / -- / --	--	--

Seal/Signature

REGISTERED INTERIOR DESIGNER
CONSTANCE H. JACKSON
1432
STATE OF TEXAS

Constance H. Jackson
10-18-2018

Project Name
HILTON AMERICAS CONVENTION CENTER HOTEL

Project Number
4993

CAD File Name
ID.204.C20.DWG

Description
CORRIDOR REFLECTED CEILING PLAN LEVEL-20

Scale
0 2" 4" 8" 16"

ID.204.C20

©2001 Gensler

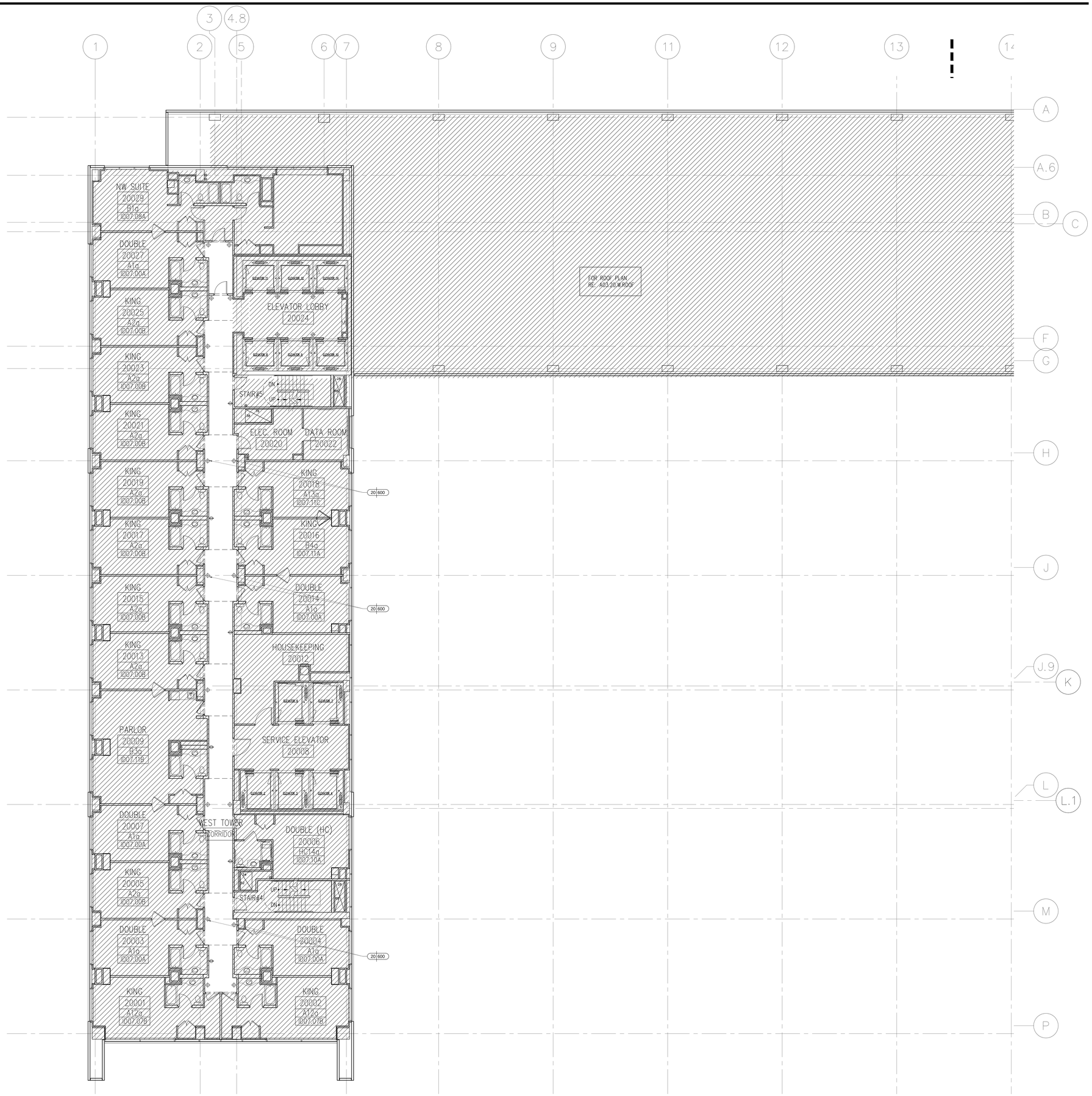

1 CORRIDOR ELECTRICAL PLAN LEVEL 20
Scale: 1/8"=1'-0"

KEY NOTES

SHEET NOTES

HILTON AMERICAS CONVENTION CENTER HOTEL

OWNER:

HOUSTON CONVENTION CENTER HOTEL CORPORATION

Two Houston Center
909 Fannin, Suite 3210
Houston TX 77010
Telephone 713.437.6898
Facsimile 713.437.6938

DEVELOPMENT MANAGER:

INTERIOR ARCHITECT:

Wilson Associates
Interior Architectural Design

3811 Turtle Creek Blvd.
16th Floor Dallas, Texas
75219 Tel (214) 521-6753
Fax (214) 521-0207

Issue	Date & Issue Description	By	Check
-- --	-- -- / -- -- / -- --	-- --	-- --

Seal/Signature

REGISTERED INTERIOR DESIGNER
CONSTANCE H. JACKSON
1433
STATE OF TEXAS

Constance H. Jackson

Project Name 10-18-2018

HILTON AMERICAS CONVENTION CENTER HOTEL

Project Number

4993

CAD File Name

ID.204.C20.DWG

Description

CORRIDOR ELECTRICAL PLAN LEVEL-20

Scale

0 2" 4" 8" 16"

ID.204.C20

©2001 Gensler

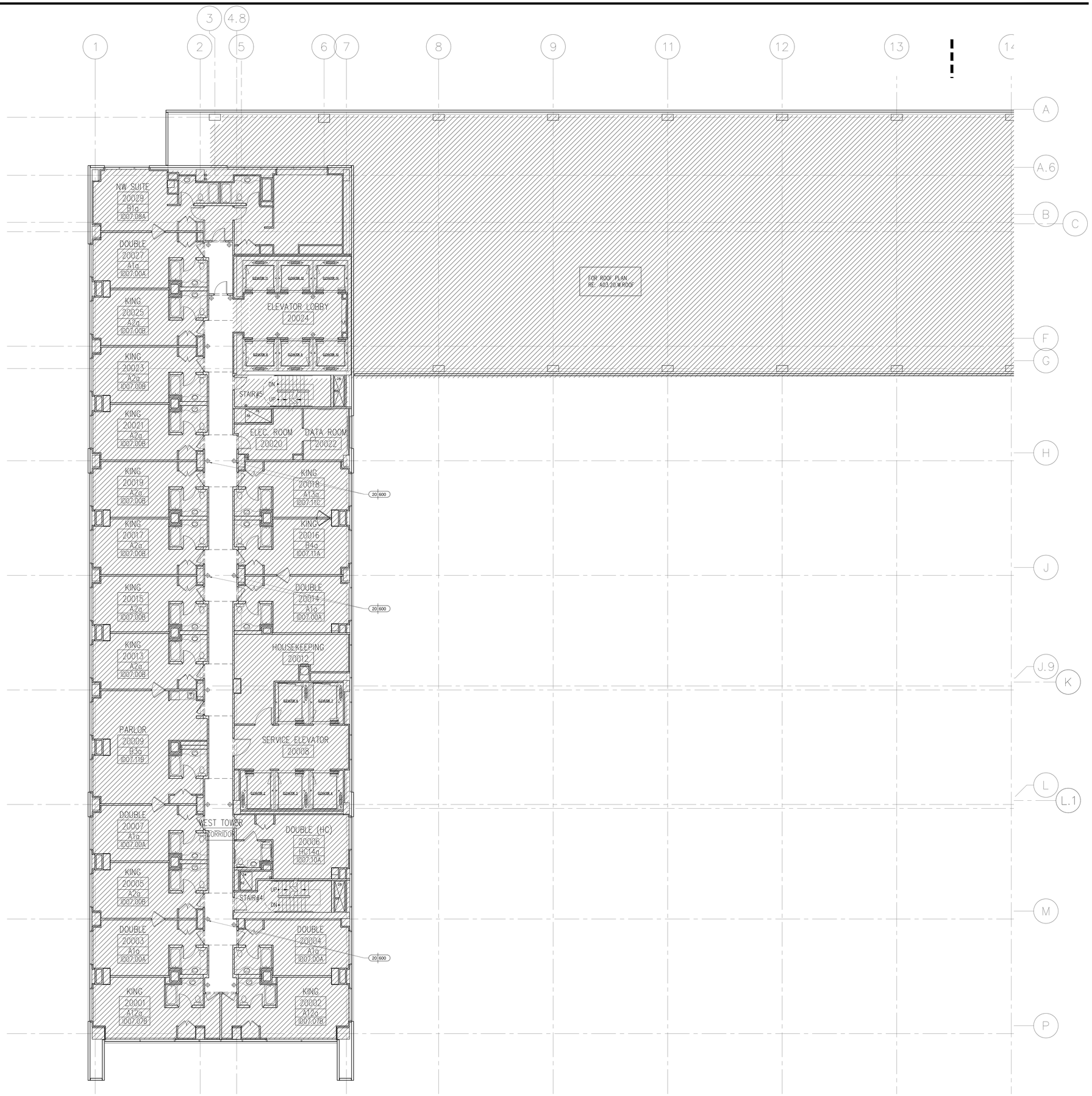

1 CORRIDOR FURNISHING PLAN LEVEL 20
Scale: 1/8"=1'-0"

KEY NOTES

SHEET NOTES

HILTON AMERICAS CONVENTION CENTER HOTEL

OWNER:

HOUSTON CONVENTION CENTER HOTEL CORPORATION

DEVELOPMENT MANAGER:

Two Houston Center
909 Fannin, Suite 3210
Houston TX 77010
Telephone 713.437.6898
Facsimile 713.437.6938

INTERIOR ARCHITECT:

Wilson Associates
Interior Architectural Design

3811 Turtle Creek Blvd.
16th Floor Dallas, Texas
75219 Tel (214) 521-6753
Fax (214) 521-0207

Issue	Date & Issue Description	By	Check
-- --	-- -- / -- -- / -- --	-- --	-- --

Seal/Signature

REGISTERED INTERIOR DESIGNER
LORRAINE H. JACKSON
1433
STATE OF TEXAS

Lorraine H. Jackson
10-18-2018

Project Name
HILTON AMERICAS CONVENTION CENTER HOTEL

Project Number
4993

CAD File Name
ID.204.C20.DWG

Description
CORRIDOR FURNISHING PLAN LEVEL-20

Scale
0 2" 4" 8" 16"

ID.204.C20

©2001 Gensler

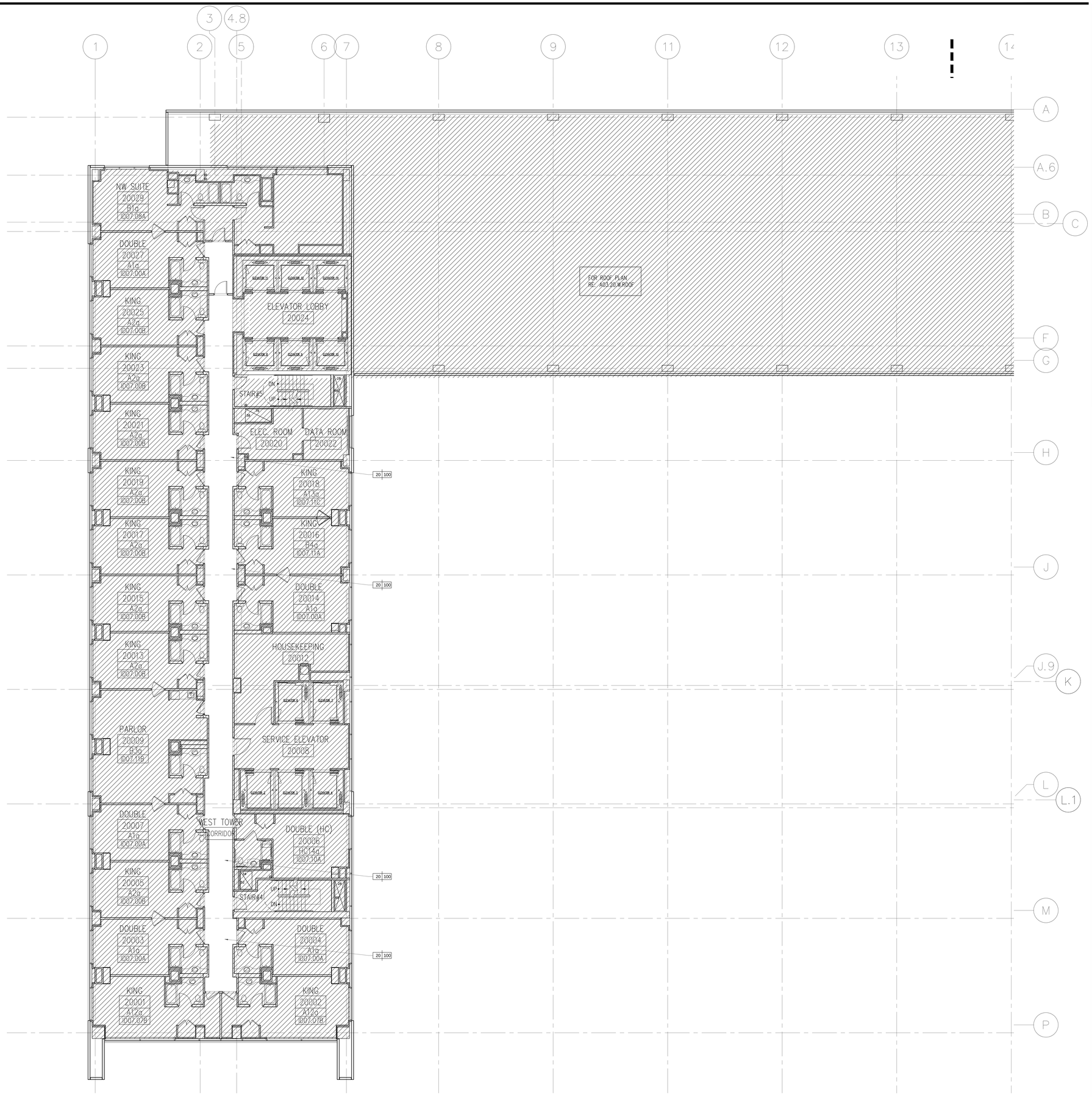

1 CORRIDOR FLOOR FINISH PLAN LEVEL 20
Scale: 1/8"=1'-0"

KEY NOTES

SHEET NOTES

HILTON AMERICAS CONVENTION CENTER HOTEL

OWNER:

HOUSTON CONVENTION CENTER HOTEL CORPORATION

Two Houston Center
909 Fannin, Suite 3210
Houston TX 77010
Telephone 713.437.6898
Facsimile 713.437.6938

DEVELOPMENT MANAGER:

INTERIOR ARCHITECT:

Wilson Associates
Interior Architectural Design

3811 Turtle Creek Blvd.
16th Floor Dallas, Texas
75219 Tel (214) 521-6753
Fax (214) 521-0207

△	Issue	Date & Issue Description	By	Check
	--	--/--/--	--	--

Seal/Signature

REGISTERED INTERIOR DESIGNER CONSTANCE H. JACKSON 1432 STATE OF TEXAS

Constance H. Jackson 10-18-2018

Project Name
HILTON AMERICAS CONVENTION CENTER HOTEL

Project Number
4993

CAD File Name
ID.204.C20.DWG

Description
CORRIDOR FLOOR FINISH PLAN LEVEL-20

Scale
0 2" 4" 8" 16"

ID.204.C20

©2001 Gensler

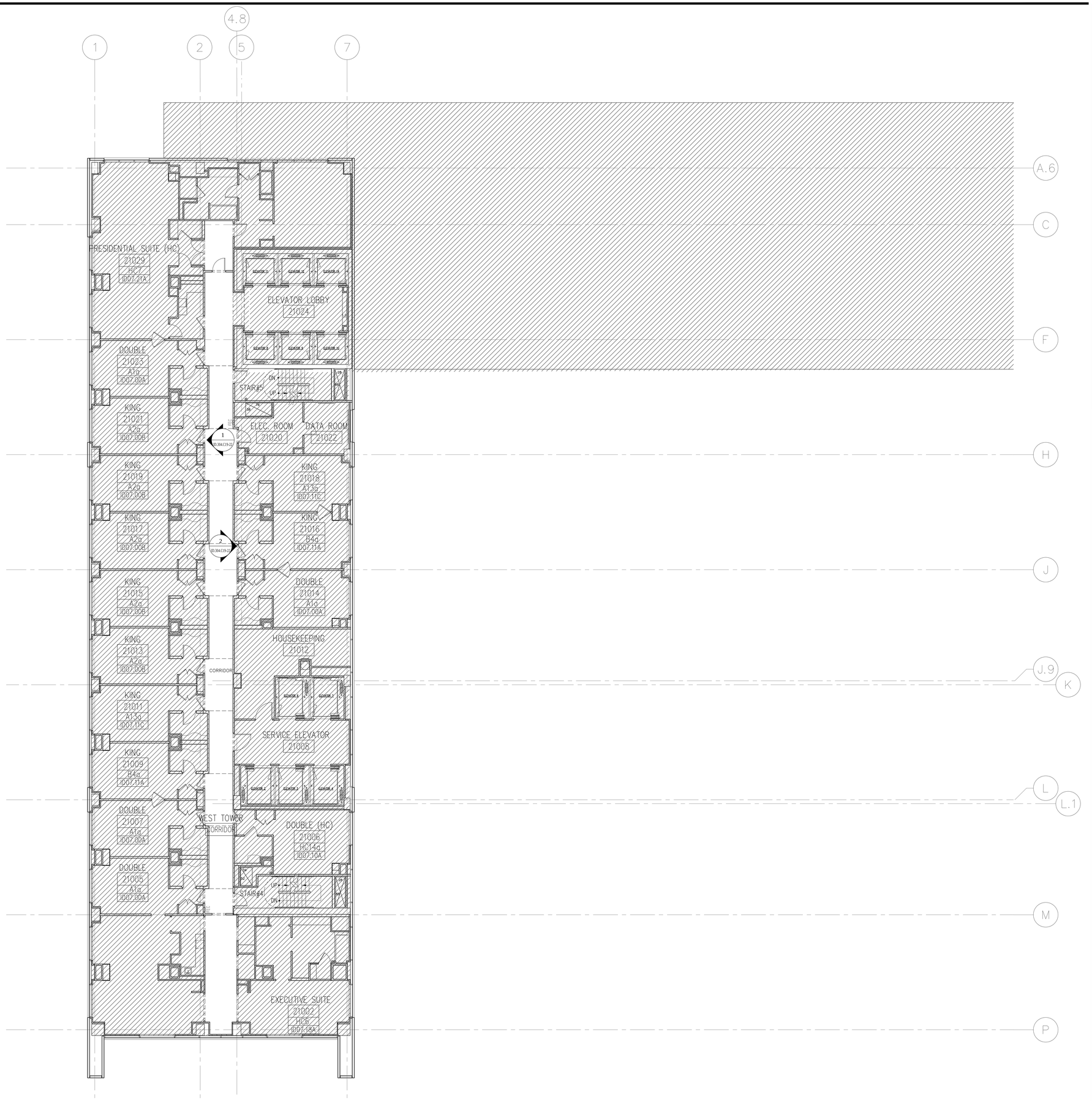

1 CORRIDOR FLOOR PLAN LEVEL-21
Scale: 1/8"=1'-0"

KEY NOTES

SHEET NOTES

HILTON AMERICAS CONVENTION CENTER HOTEL

OWNER:

HOUSTON CONVENTION CENTER HOTEL CORPORATION

Two Houston Center
909 Fannin, Suite 3210
Houston TX 77010
Telephone 713.437.6898
Facsimile 713.437.6938

DEVELOPMENT MANAGER:

INTERIOR ARCHITECT:

Wilson Associates
Interior Architectural Design

3811 Turtle Creek Blvd.
16th Floor Dallas, Texas
75219 Tel (214) 521-6753
Fax (214) 521-0207

Issue	Date & Issue Description	By	Check
--	-- / -- / --	--	--

Seal/Signature

REGISTERED INTERIOR DESIGNER CONSTANCE H. JACKSON 1433 STATE OF TEXAS

10-18-2018

Project Name
HILTON AMERICAS CONVENTION CENTER HOTEL

Project Number
4993

CAD File Name
ID.205.C21.DWG

Description
CORRIDOR FLOOR PLAN LEVEL-21

Scale
0 2" 4" 8" 16"

ID.205.C21

©2001 Gensler

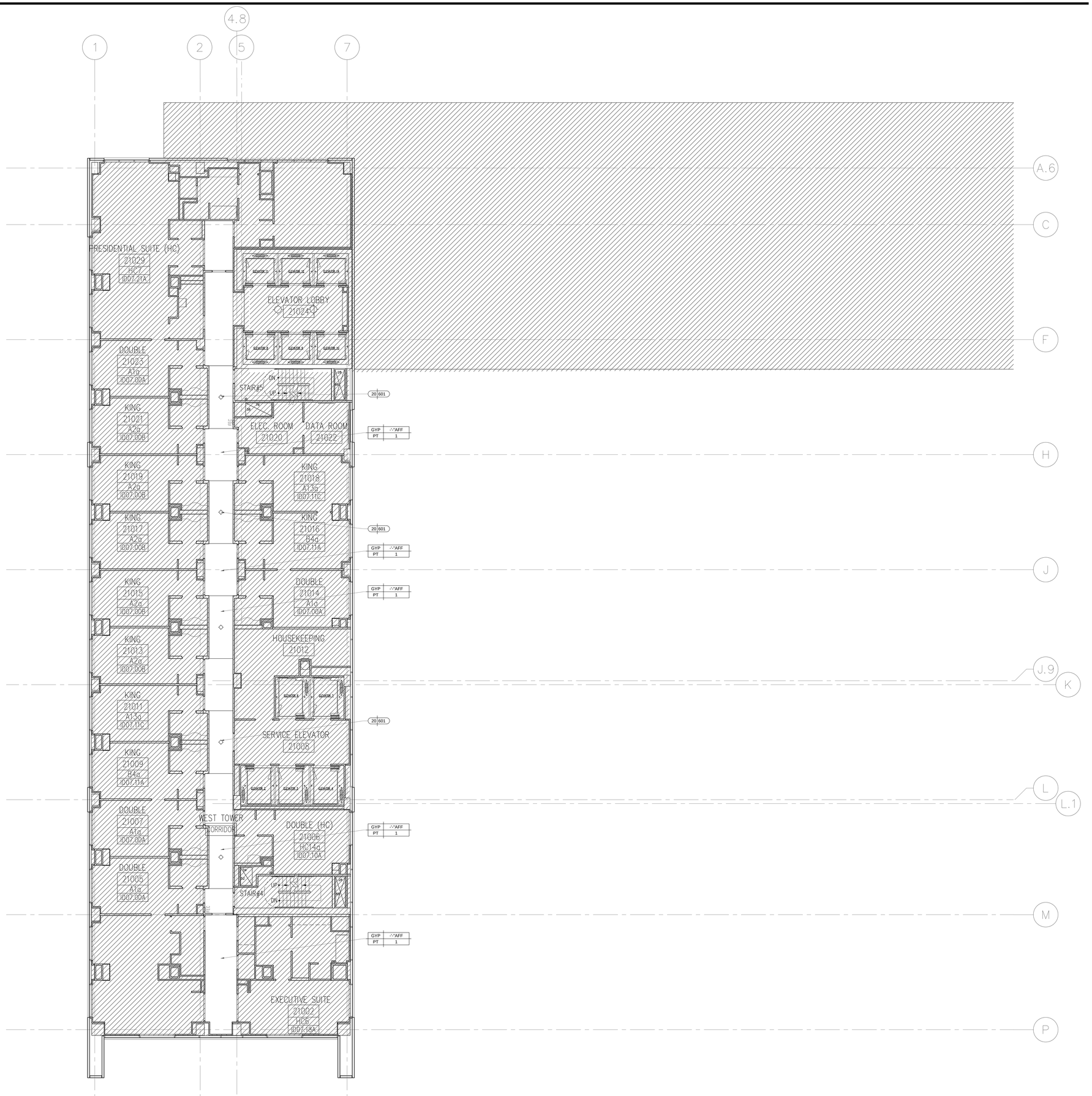

1 CORRIDOR REFLECTED CEILING PLAN LEVEL-21
Scale: 1/8"=1'-0"

KEY NOTES

SHEET NOTES

HILTON AMERICAS CONVENTION CENTER HOTEL

OWNER:

HOUSTON CONVENTION CENTER HOTEL CORPORATION

Two Houston Center
909 Fannin, Suite 3210
Houston TX 77010
Telephone 713.437.6898
Facsimile 713.437.6938

DEVELOPMENT MANAGER:

INTERIOR ARCHITECT:

Wilson Associates
Interior Architectural Design

3811 Turtle Creek Blvd.
16th Floor Dallas, Texas
75219 Tel (214) 521-6753
Fax (214) 521-0207

Issue	Date & Issue Description	By	Check
--	-- -- / -- -- / -- --	--	--

Seal/Signature

REGISTERED INTERIOR DESIGNER
COMPLIANCE IN MOTION
1433
STATE OF TEXAS

10-18-2018

Project Name

HILTON AMERICAS CONVENTION CENTER HOTEL

Project Number

4993

CAD File Name

ID.205.C21.DWG

Description

CORRIDOR REFLECTED CEILING PLAN LEVEL-21

Scale

0 2" 4" 8" 16"

ID.205A.C21

© 2001 Gensler

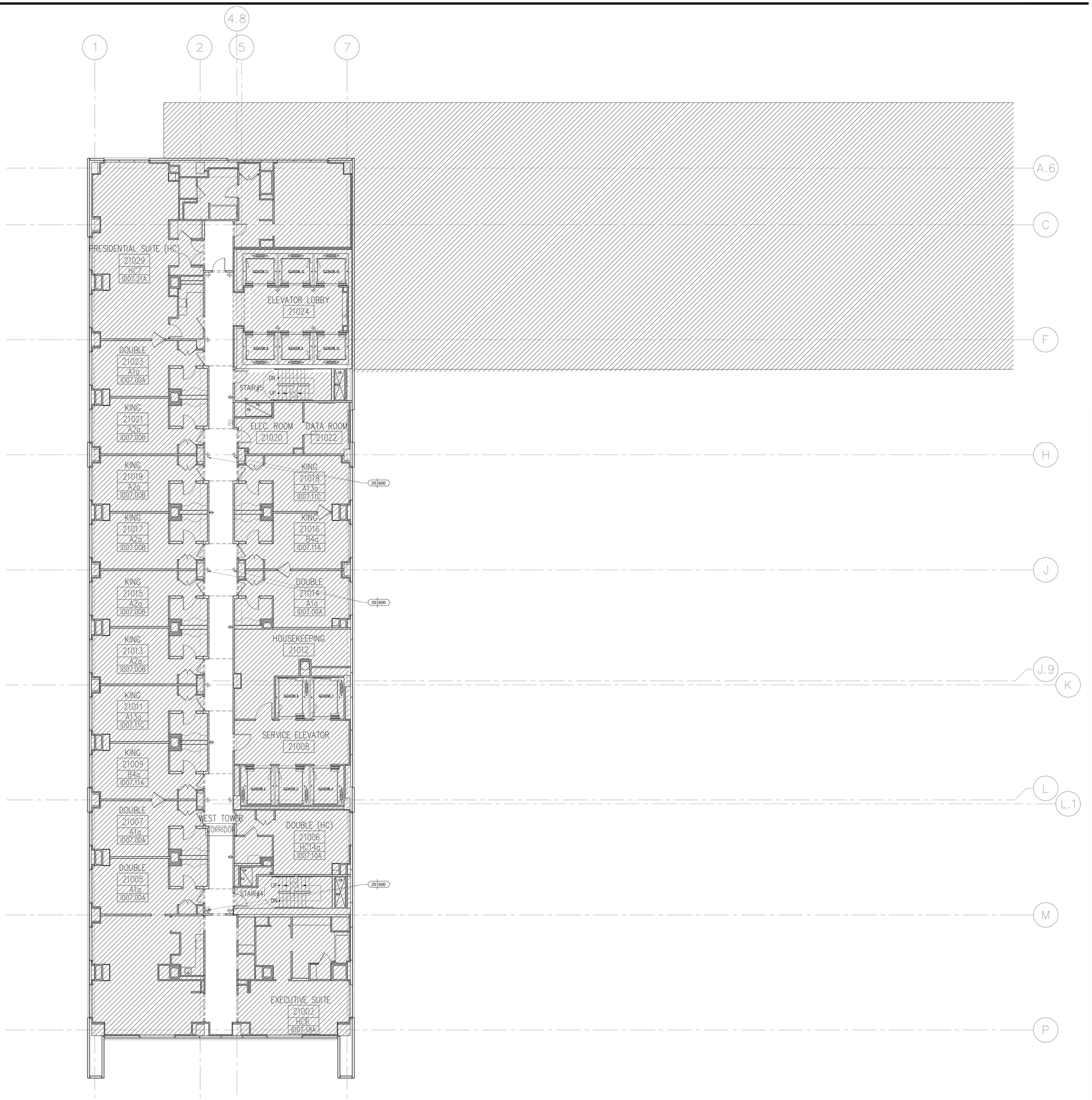

1 CORRIDOR ELECTRICAL PLAN LEVEL-21
Scale: 1/8"=1'-0"

KEY NOTES

SHEET NOTES

HILTON AMERICAS CONVENTION CENTER HOTEL

OWNER:

HOUSTON CONVENTION CENTER HOTEL CORPORATION

Two Houston Center
909 Fannin, Suite 3210
Houston TX 77010
Telephone 713.437.6898
Facsimile 713.437.6938

DEVELOPMENT MANAGER:

INTERIOR ARCHITECT:

Wilson Associates
Interior Architectural Design

3811 Turtle Creek Blvd.
16th Floor Dallas, Texas
75219 Tel (214) 521-6753
Fax (214) 521-0207

Issue	Date & Issue Description	By	Check
--	-- / -- / --	--	--

Seal/Signature

REGISTERED INTERIOR DESIGNER CONSTANCE H. JACKSON 1433 STATE OF TEXAS

10-18-2018

Project Name
HILTON AMERICAS CONVENTION CENTER HOTEL

Project Number
4993

CAD File Name
ID.205.C21.DWG

Description
CORRIDOR ELECTRICAL PLAN LEVEL-21

Scale
0 2" 4" 8" 16"

ID.205B.C21

©2001 Gensler

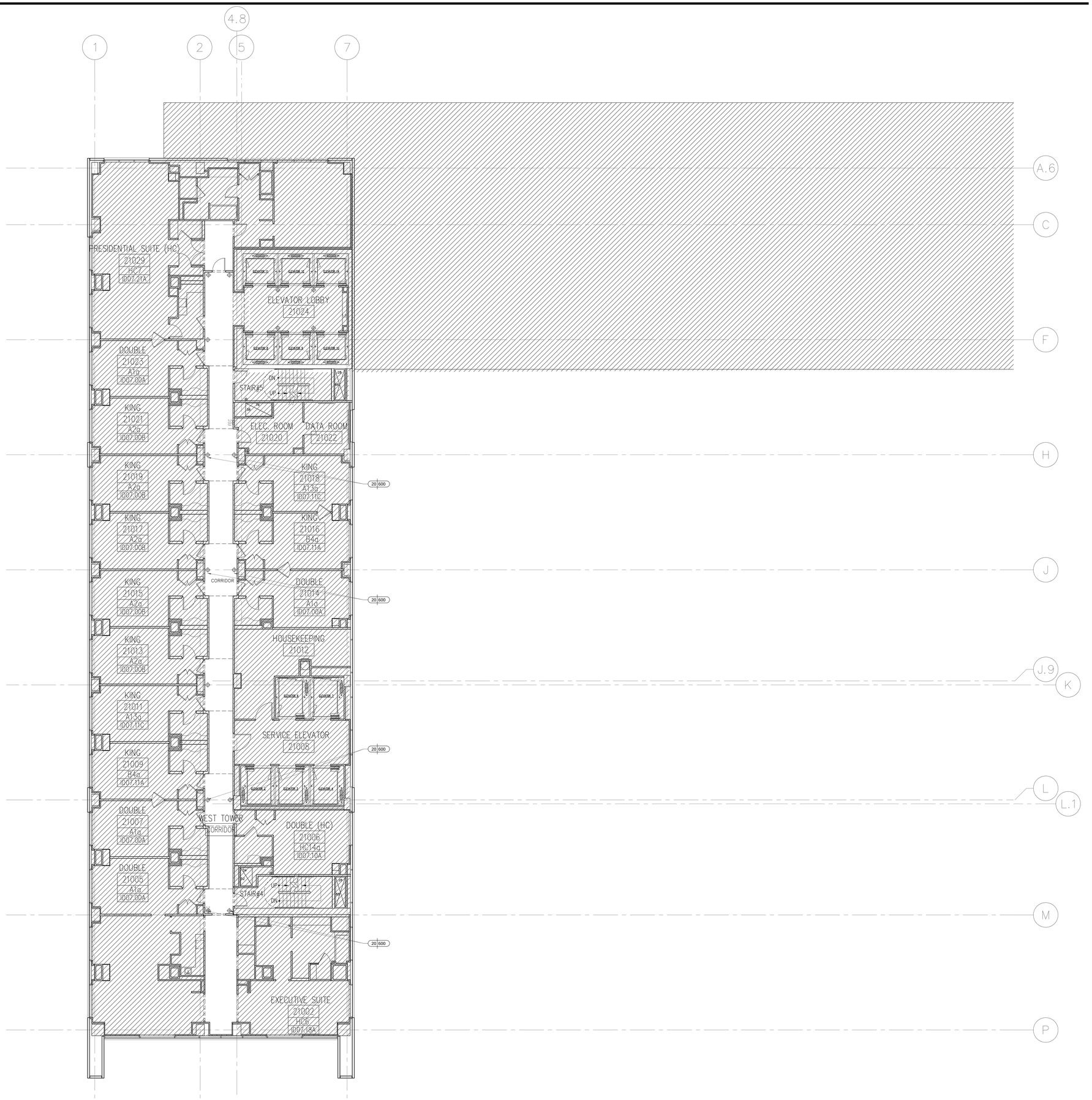

1 CORRIDOR FURNISHING PLAN LEVEL-21
Scale: 1/8"=1'-0"

KEY NOTES

SHEET NOTES

HILTON AMERICAS CONVENTION CENTER HOTEL

OWNER:

HOUSTON CONVENTION CENTER HOTEL CORPORATION

DEVELOPMENT MANAGER:

Two Houston Center
909 Fannin, Suite 3210
Houston TX 77010
Telephone 713.437.6898
Facsimile 713.437.6938

INTERIOR ARCHITECT:

Wilson Associates
Interior Architectural Design

3811 Turtle Creek Blvd.
16th Floor Dallas, Texas
75219 Tel (214) 521-6753
Fax (214) 521-0207

Issue	Date & Issue Description	By	Check
--	--/--/--	--	--

Seal/Signature

REGISTERED INTERIOR DESIGNER CONSTANCE H. JACKSON 1433 STATE OF TEXAS

Constance H. Jackson 10-18-2018

Project Name
HILTON AMERICAS CONVENTION CENTER HOTEL

Project Number
4993

CAD File Name
ID.205.C21.DWG

Description
CORRIDOR FURNISHING PLAN LEVEL-21

Scale
0 2" 4" 8" 16"

ID.205C.C21

©2001 Gensler

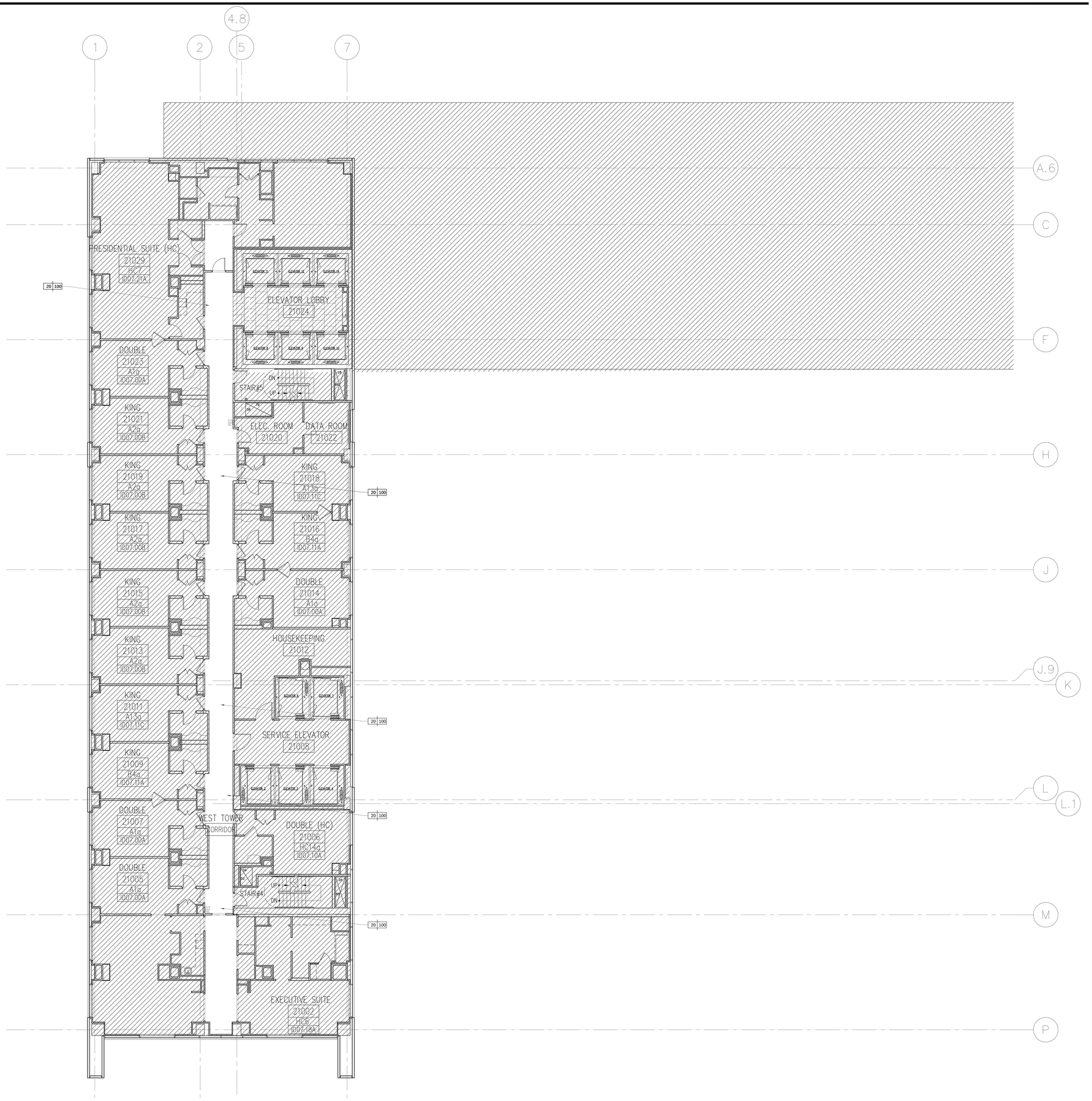

1 CORRIDOR FLOOR FINISH PLAN LEVEL-21
Scale: 1/8"=1'-0"

KEY NOTES

SHEET NOTES

HILTON AMERICAS CONVENTION CENTER HOTEL

OWNER:

HOUSTON CONVENTION CENTER HOTEL CORPORATION

DEVELOPMENT MANAGER:

Two Houston Center
909 Fannin, Suite 3210
Houston TX 77010
Telephone 713.437.6898
Facsimile 713.437.6938

INTERIOR ARCHITECT:

Wilson Associates
Interior Architectural Design

3811 Turtle Creek Blvd.
16th Floor Dallas, Texas
75219 Tel (214) 521-6753
Fax (214) 521-0207

Issue	Date & Issue Description	By	Check
--	-- / -- / --	--	--

Seal/Signature

REGISTERED INTERIOR DESIGNER CONSTANCE H. JACKSON 1433 STATE OF TEXAS

Constance H. Jackson 10-18-2018

Project Name

HILTON AMERICAS CONVENTION CENTER HOTEL

Project Number

4993

CAD File Name

ID.205.C21.DWG

Description

CORRIDOR FLOOR FINISH PLAN LEVEL-21

Scale

0 2" 4" 8" 16"

ID.205D.C21

©2001 Gensler

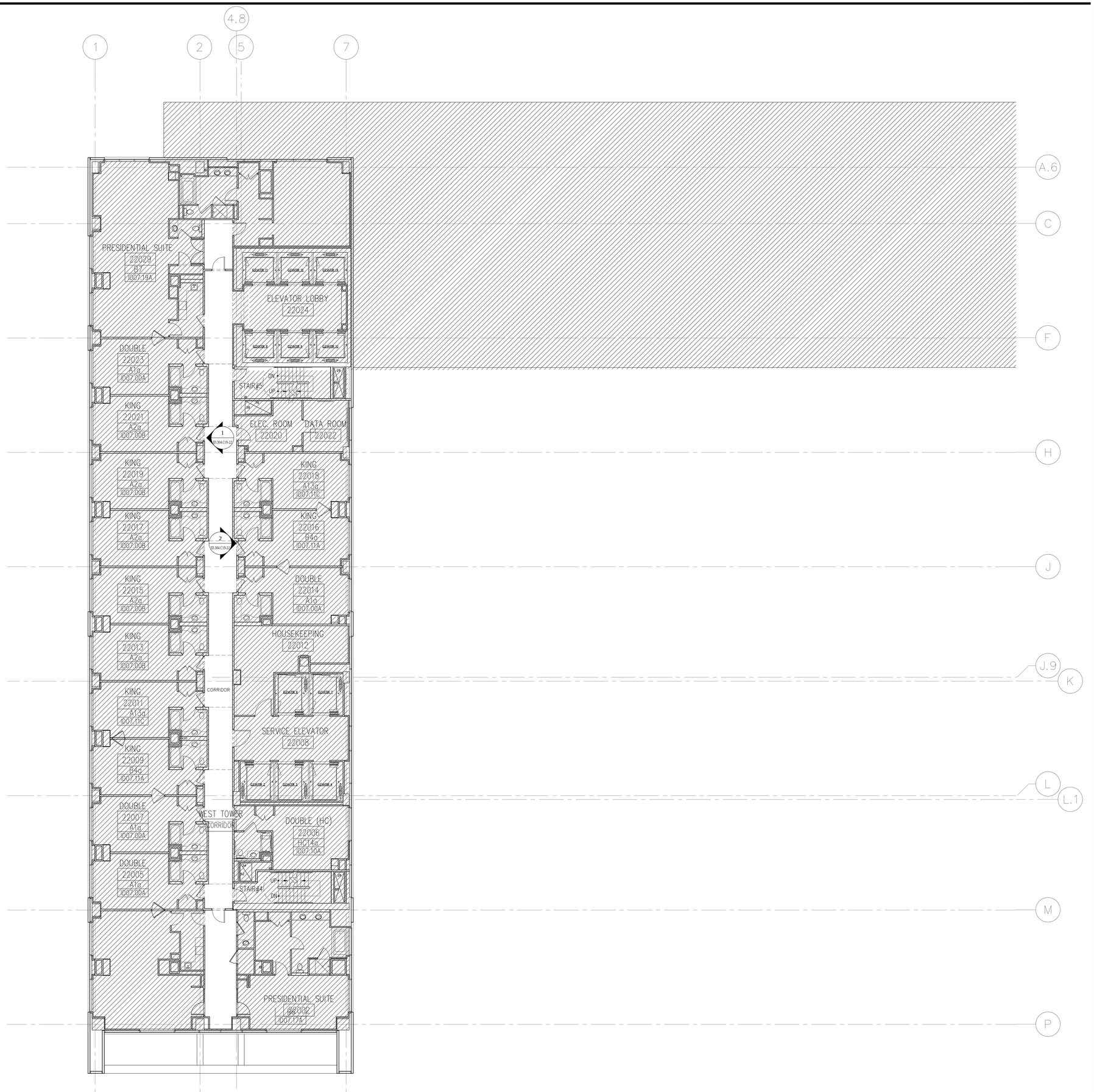

1 CORRIDOR FLOOR PLAN LEVEL 22
Scale: 1/8"=1'-0"

KEY NOTES

SHEET NOTES

HILTON AMERICAS CONVENTION CENTER HOTEL

OWNER:
HOUSTON CONVENTION CENTER HOTEL CORPORATION
Two Houston Center
909 Fannin, Suite 3210
Houston TX 77010
Telephone 713.437.6898
Facsimile 713.437.6938

DEVELOPMENT MANAGER:

INTERIOR ARCHITECT:
Wilson Associates
Interior Architectural Design
3811 Turtle Creek Blvd.
16th Floor Dallas, Texas
75219 Tel (214) 521-6753
Fax (214) 521-0207

Issue	Date & Issue Description	By	Check
--	--/--/--	--	--

Seal/Signature

REGISTERED INTERIOR DESIGNER CONSTANCE H. GAULKSON 1433 STATE OF TEXAS

Constance H. Gaulkson 10-18-2018

Project Name
HILTON AMERICAS CONVENTION CENTER HOTEL

Project Number
4993

CAD File Name
ID.205.C22.DWG

Description
CORRIDOR FLOOR PLAN LEVEL-22

Scale
0 2" 4" 8" 16"

ID.205.C22

©2001 Gensler

1 CORRIDOR REFLECTED CEILING PLAN LEVEL 22
Scale: 1/8"=1'-0"

KEY NOTES

SHEET NOTES

HILTON AMERICAS CONVENTION CENTER HOTEL

OWNER:

HOUSTON CONVENTION CENTER HOTEL CORPORATION

Two Houston Center
909 Fannin, Suite 3210
Houston TX 77010
Telephone 713.437.6898
Facsimile 713.437.6938

DEVELOPMENT MANAGER:

INTERIOR ARCHITECT:

Wilson Associates
Interior Architectural Design

3811 Turtle Creek Blvd.
16th Floor Dallas, Texas
75219 Tel (214) 521-6753
Fax (214) 521-0207

Issue	Date & Issue Description	By	Check
--	-- -- / -- -- / -- --	--	-- --

Seal/Signature

REGISTERED INTERIOR DESIGNER
CONSTANCE H. JACKSON
1433
STATE OF TEXAS

Constance H. Jackson 10-18-2018

Project Name
HILTON AMERICAS CONVENTION CENTER HOTEL

Project Number
4993

CAD File Name
ID.205.C22.DWG

Description
CORRIDOR REFLECTED CEILING PLAN LEVEL-22

Scale
0 2" 4" 8" 16"

ID.205A.C22

©2001 Gensler

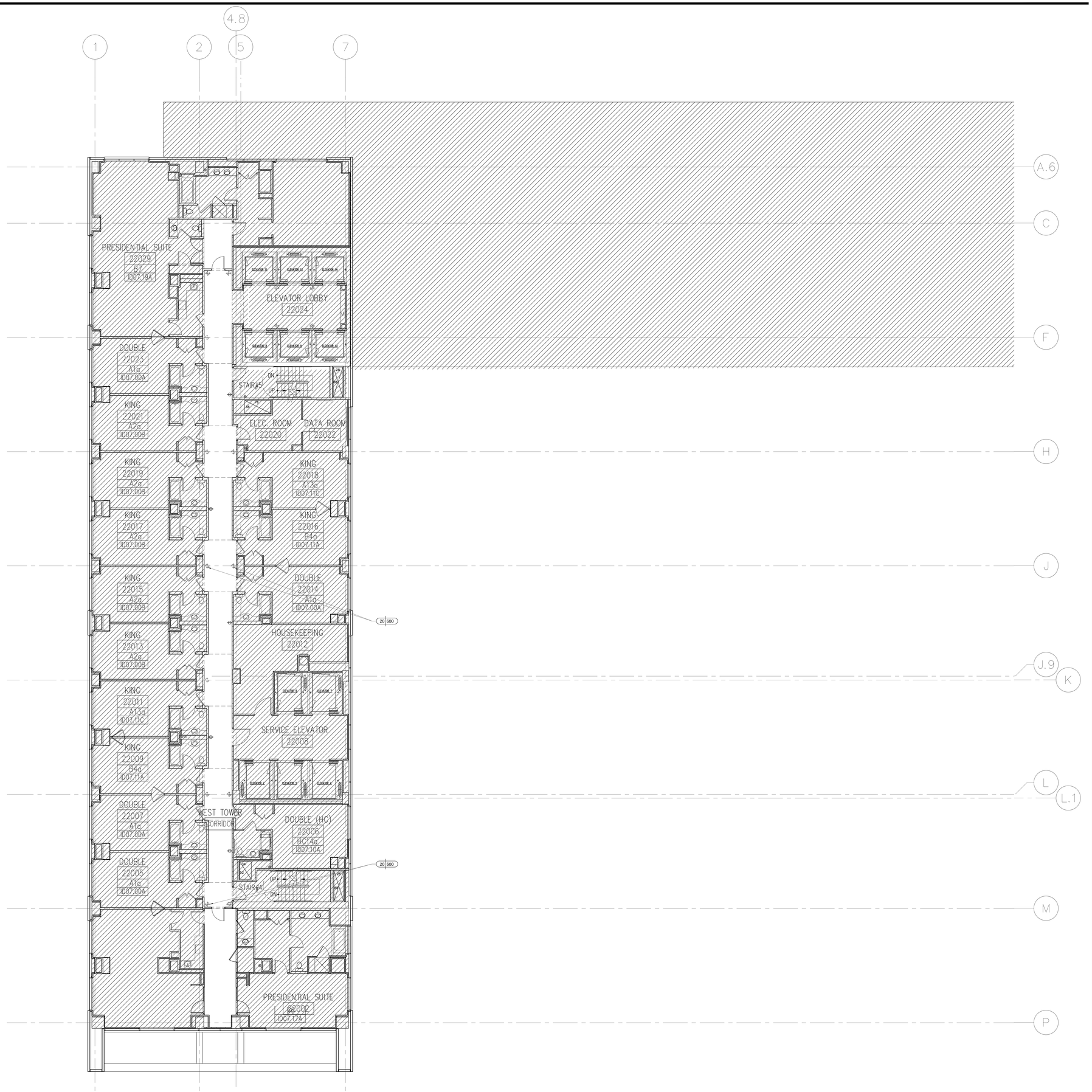

1 CORRIDOR ELECTRICAL PLAN LEVEL 22
Scale: 1/8"=1'-0"

KEY NOTES

SHEET NOTES

HILTON AMERICAS CONVENTION CENTER HOTEL

OWNER:

HOUSTON CONVENTION CENTER HOTEL CORPORATION

Two Houston Center
909 Fannin, Suite 3210
Houston TX 77010
Telephone 713.437.6898
Facsimile 713.437.6938

DEVELOPMENT MANAGER:

INTERIOR ARCHITECT:

Wilson Associates
Interior Architectural Design

3811 Turtle Creek Blvd.
16th Floor Dallas, Texas
75219 Tel (214) 521-6753
Fax (214) 521-0207

Issue	Date & Issue Description	By	Check
--	-- -- / -- -- / -- --	-- --	-- --

Seal/Signature

REGISTERED INTERIOR DESIGNER CONSTANCE H. JACKSON 1433 STATE OF TEXAS

10-18-2018

Project Name
HILTON AMERICAS CONVENTION CENTER HOTEL

Project Number
4993

CAD File Name
ID.205.C22.DWG

Description
CORRIDOR ELECTRICAL PLAN LEVEL-22

Scale
0 2" 4" 8" 16"

ID.205B.C22

©2001 Gensler

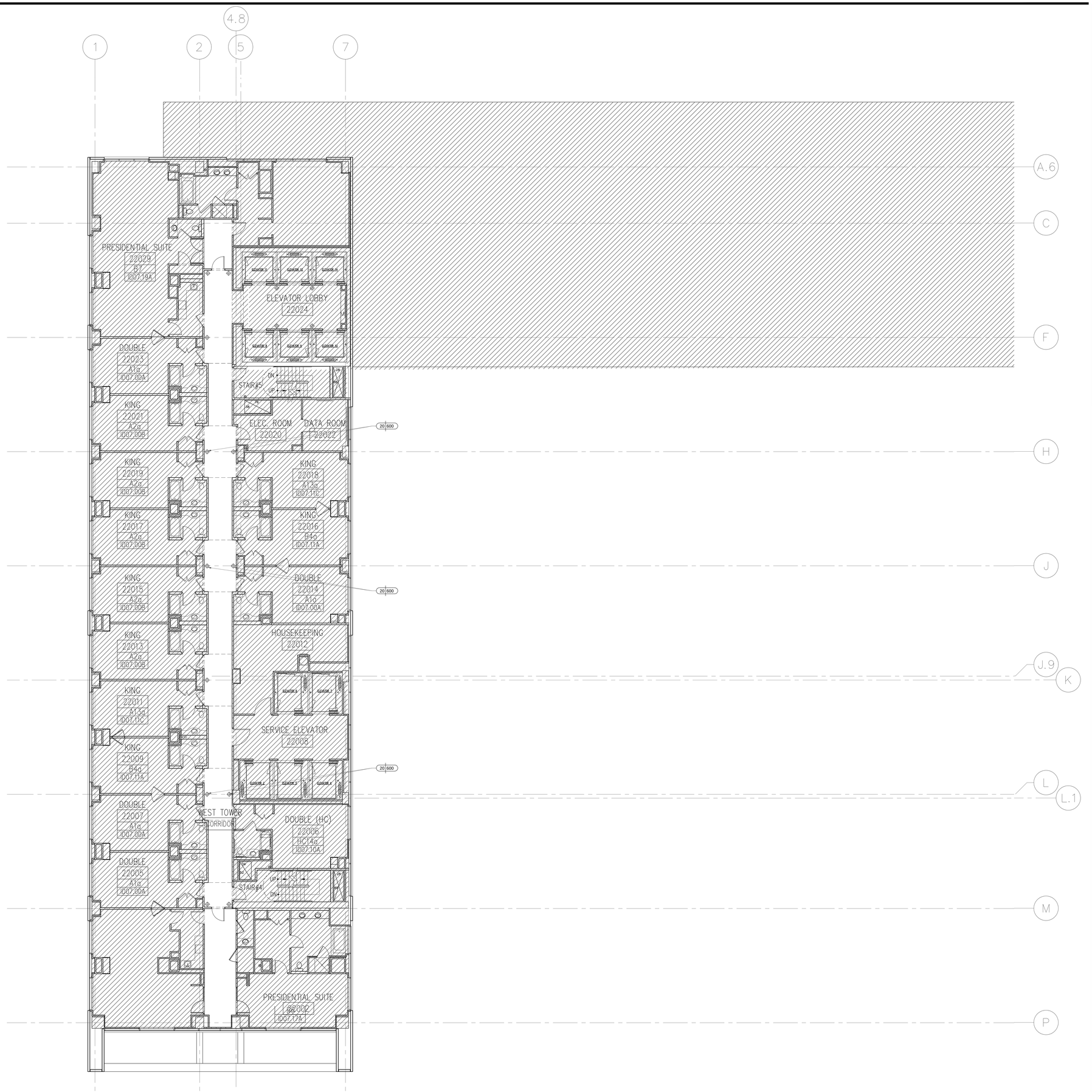

1 CORRIDOR FURNISHING PLAN LEVEL 22
Scale: 1/8"=1'-0"

KEY NOTES

SHEET NOTES

HILTON AMERICAS CONVENTION CENTER HOTEL

OWNER:
HOUSTON CONVENTION CENTER HOTEL CORPORATION
DEVELOPMENT MANAGER:

Two Houston Center
909 Fannin, Suite 3210
Houston TX 77010
Telephone 713.437.6898
Facsimile 713.437.6938

INTERIOR ARCHITECT:
Wilson Associates
Interior Architectural Design

3811 Turtle Creek Blvd.
16th Floor Dallas, Texas
75219 Tel (214) 521-6753
Fax (214) 521-0207

Issue	Date & Issue Description	By	Check
--	-- / -- / --	--	--

Seal/Signature

REGISTERED INTERIOR DESIGNER
CONSTANCE H. JACKSON
1433
STATE OF TEXAS

Constance H. Jackson 10-18-2018

Project Name
HILTON AMERICAS CONVENTION CENTER HOTEL

Project Number
4993

CAD File Name
ID.205.C22.DWG

Description
CORRIDOR FURNISHING PLAN LEVEL-22

Scale
0 2" 4" 8" 16"

ID.205C.C22

©2001 Gensler

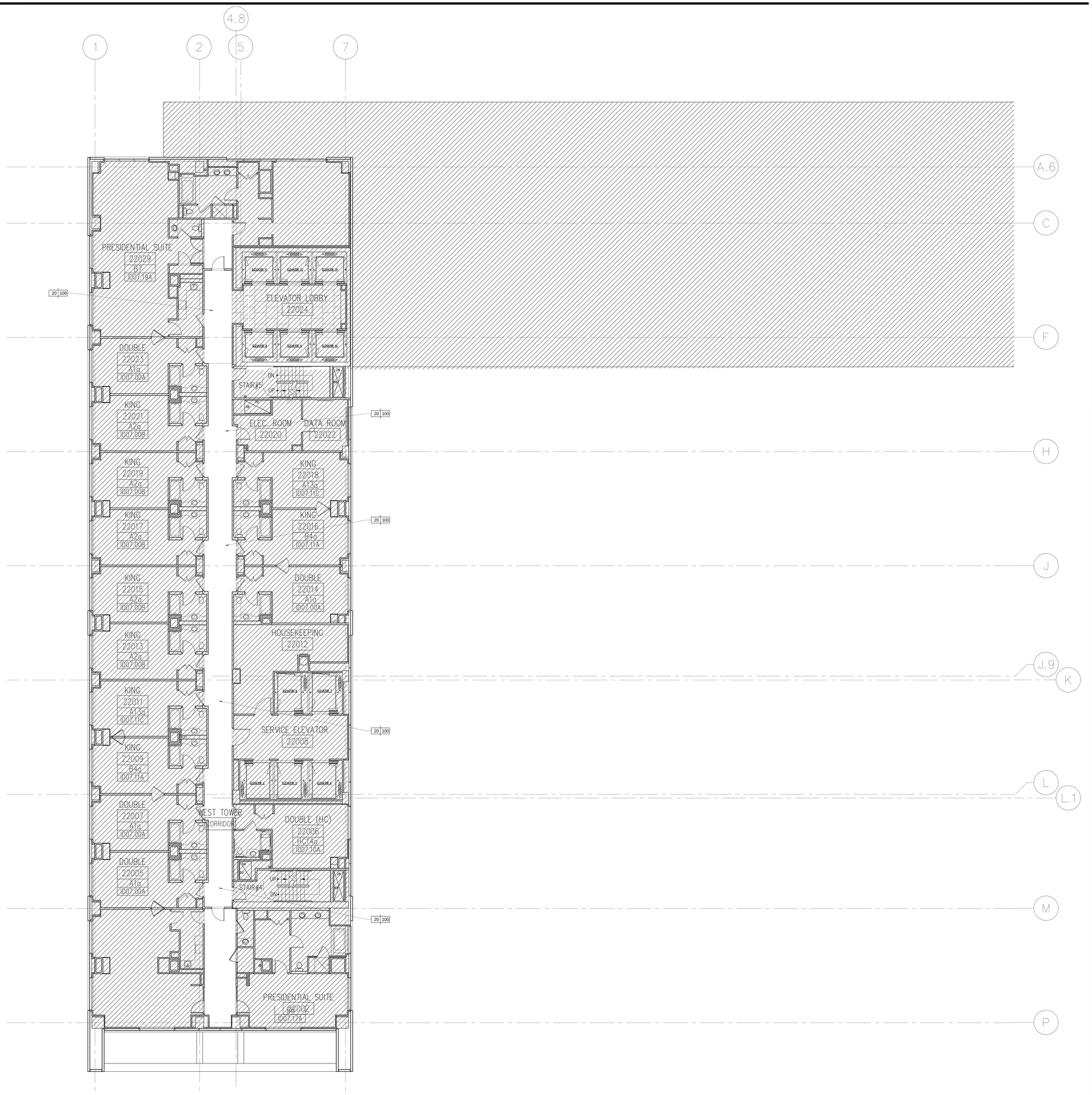

1 CORRIDOR FLOOR FINISH LEVEL 22
Scale: 1/8"=1'-0"

KEY NOTES

SHEET NOTES

HILTON AMERICAS CONVENTION CENTER HOTEL

OWNER:

HOUSTON CONVENTION CENTER HOTEL CORPORATION

Two Houston Center
909 Fannin, Suite 3210
Houston TX 77010
Telephone 713.437.6898
Facsimile 713.437.6938

DEVELOPMENT MANAGER:

INTERIOR ARCHITECT:

Wilson Associates
Interior Architectural Design

3811 Turtle Creek Blvd.
16th Floor Dallas, Texas
75219 Tel (214) 521-6753
Fax (214) 521-0207

Issue	Date & Issue Description	By	Check
--	-- -- / -- -- / -- --	--	-- --

Seal/Signature

REGISTERED INTERIOR DESIGNER
CONSTANCE H. JACKSON
1433
STATE OF TEXAS

Constance H. Jackson 10-18-2018

Project Name
HILTON AMERICAS CONVENTION CENTER HOTEL

Project Number
4993

CAD File Name
ID.205.C22.DWG

Description
CORRIDOR FLOOR FINISH LEVEL-22

Scale
0 2" 4" 8" 16"

ID.205D.C22

©2001 Gensler

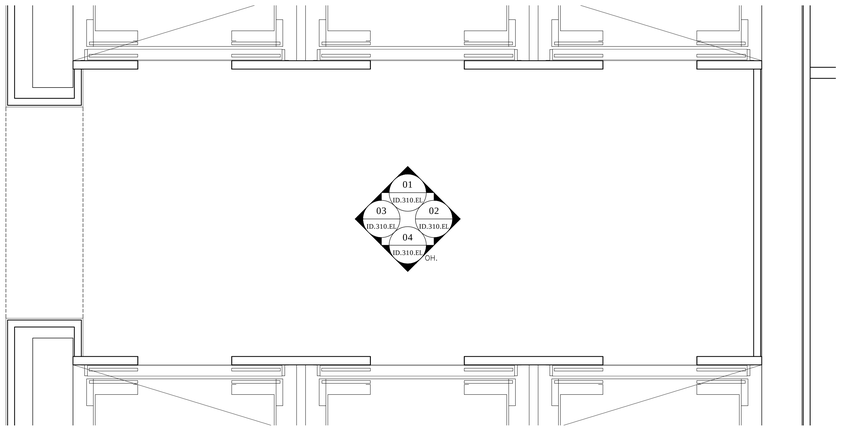

01 TYPICAL ELEVATOR LOBBY–FLOOR PLAN (FLOOR 6–18)
Scale: 1/2"=1'–0"

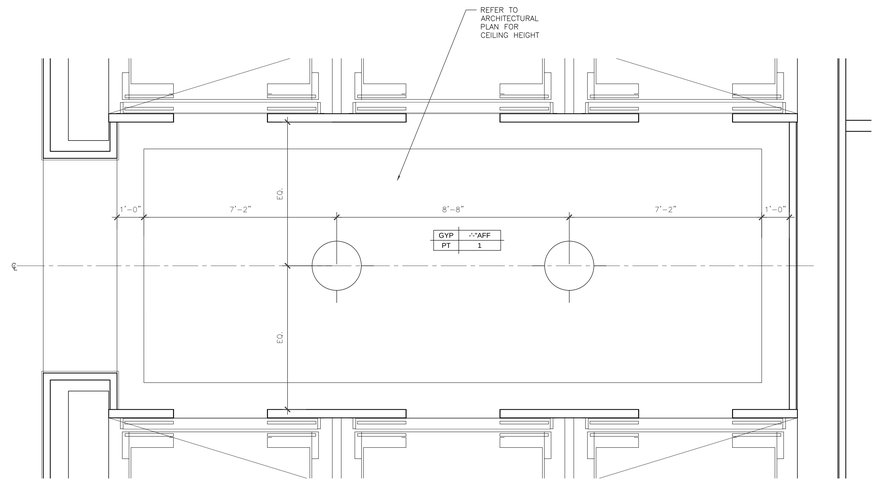

02 TYPICAL ELEVATOR LOBBY–REFLECTED CEILING PLAN (FLOOR 6–18)
Scale: 1/2"=1'–0"

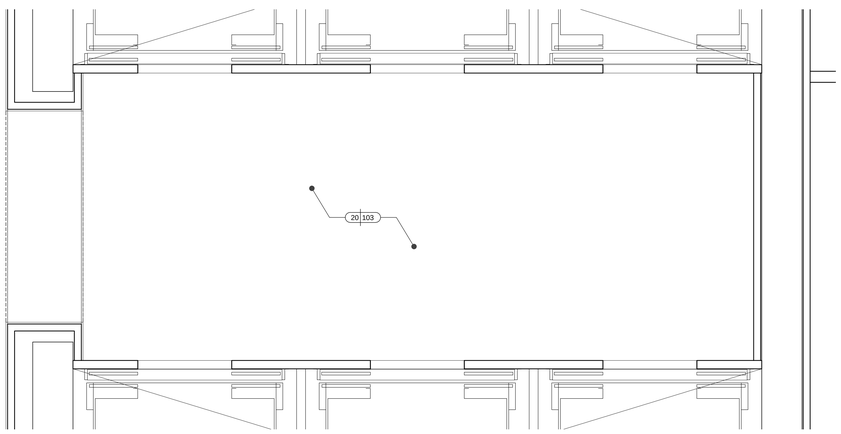

03 TYPICAL ELEVATOR LOBBY–FLOOR FINISH PLAN (FLOOR 6–18)
Scale: 1/2"=1'–0"

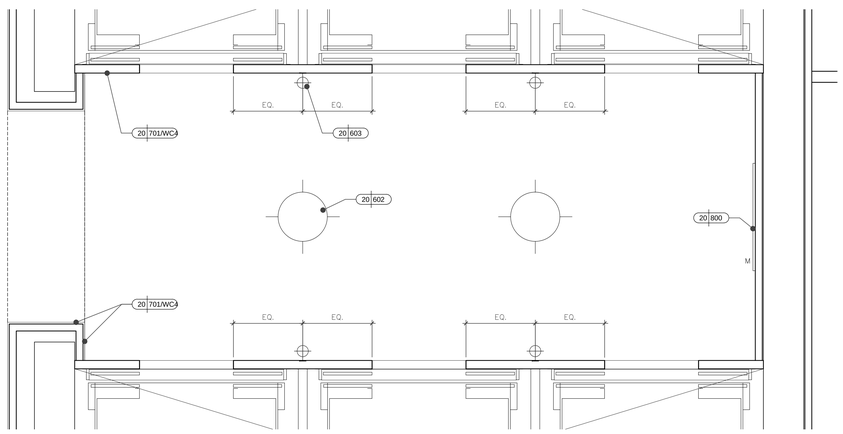

04 TYPICAL ELEVATOR LOBBY–FF&E / POWER LAYOUT PLAN (FLOOR 6–18)
Scale: 1/2"=1'–0"

KEY NOTES

SHEET NOTES

HILTON AMERICAS CONVENTION CENTER HOTEL

OWNER:

HOUSTON CONVENTION CENTER HOTEL CORPORATION

Two Houston Center
909 Fannin, Suite 3210
Houston TX 77010
Telephone 713.437.6898
Facsimile 713.437.6938

DEVELOPMENT MANAGER:

INTERIOR ARCHITECT:

Wilson Associates
Interior Architectural Design

3811 Turtle Creek Blvd.
16th Floor Dallas, Texas
75219 Tel (214) 521-6753
Fax (214) 521-0207

Issue	Date & Issue Description	By	Check
--	--/--/--	--	--

Seal/Signature

REGISTERED INTERIOR DESIGNER
CONSTANCE H. JACKSON
1433
STATE OF TEXAS

10-18-2018

Project Name
HILTON AMERICAS CONVENTION CENTER HOTEL

Project Number
4993

CAD File Name
ID.210.01.DWG

Description
ELEVATOR LOBBY ENLARGED PLAN–LOWER LEVELS

Scale
0 2" 4" 8" 16"

ID.210.01

©2001 Gensler

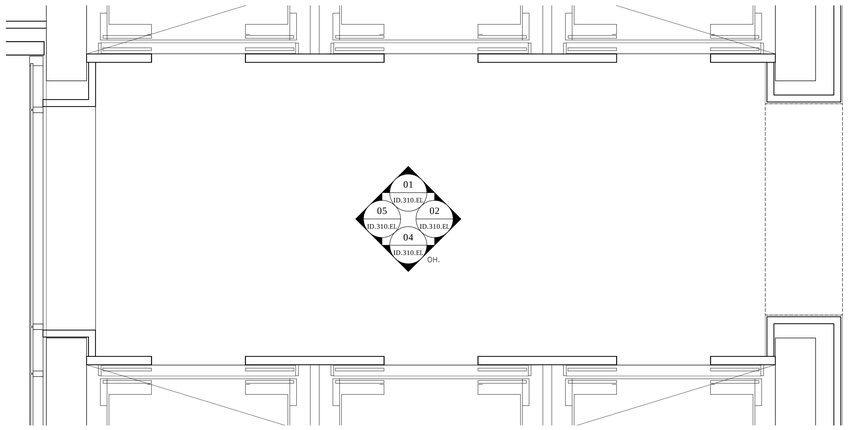

01 TYPICAL ELEVATOR LOBBY–FLOOR PLAN
Scale: 1/2"=1'–0"

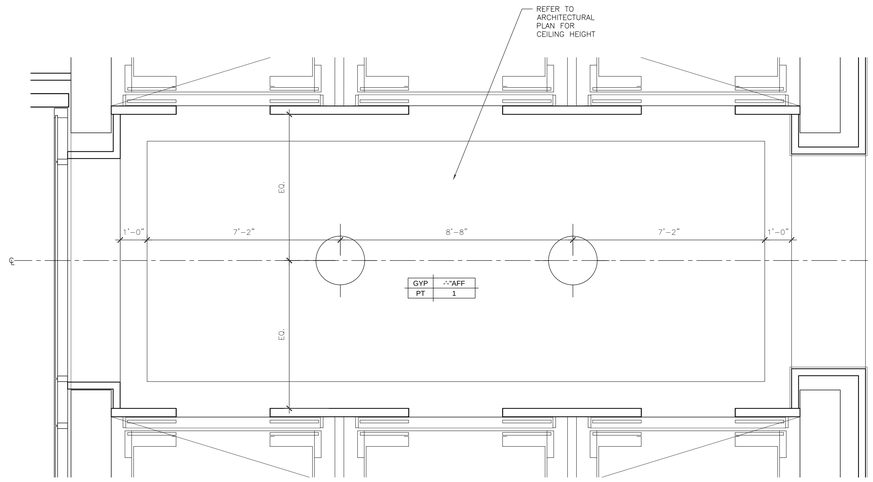

02 TYPICAL ELEVATOR LOBBY–REFLECTED CEILING PLAN
Scale: 1/2"=1'–0"

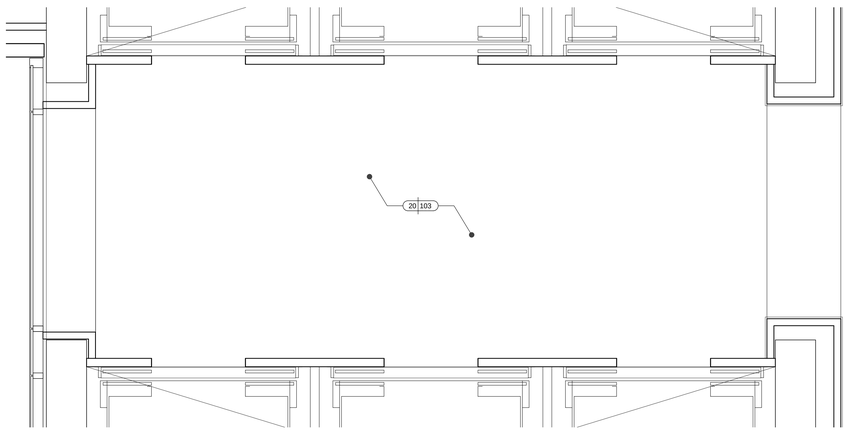

03 TYPICAL ELEVATOR LOBBY–FLOOR FINISH PLAN
Scale: 1/2"=1'–0"

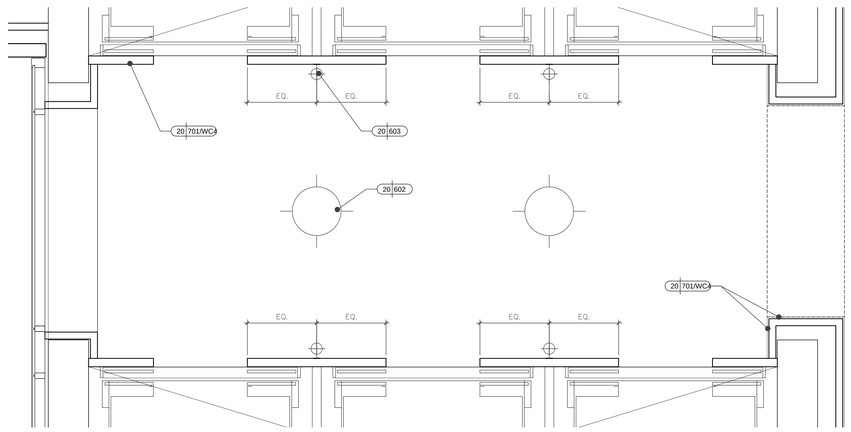

04 TYPICAL ELEVATOR LOBBY–FF&E / POWER LAYOUT PLAN
Scale: 1/2"=1'–0"

KEY NOTES

SHEET NOTES

HILTON AMERICAS CONVENTION CENTER HOTEL

OWNER:

HOUSTON CONVENTION CENTER HOTEL CORPORATION

Two Houston Center
909 Fannin, Suite 3210
Houston TX 77010
Telephone 713.437.6898
Facsimile 713.437.6938

DEVELOPMENT MANAGER:

INTERIOR ARCHITECT:

Wilson Associates
Interior Architectural Design

3811 Turtle Creek Blvd.
16th Floor Dallas, Texas
75219 Tel (214) 521-6753
Fax (214) 521-0207

Issue	Date & Issue Description	By	Check
-- --	-- -- / -- -- / -- --	-- --	-- --

Seal/Signature

REGISTERED INTERIOR DESIGNER
CONSTANCE H. GAULKSON
1433
STATE OF TEXAS

10-18-2018

Project Name

HILTON AMERICAS CONVENTION CENTER HOTEL

Project Number

4993

CAD File Name

ID.210.02.DWG

Description

ELEVATOR LOBBY ENLARGED PLAN–LOWER LEVELS

Scale

0 2" 4" 8" 16"

ID.210.02

©2001 Gensler

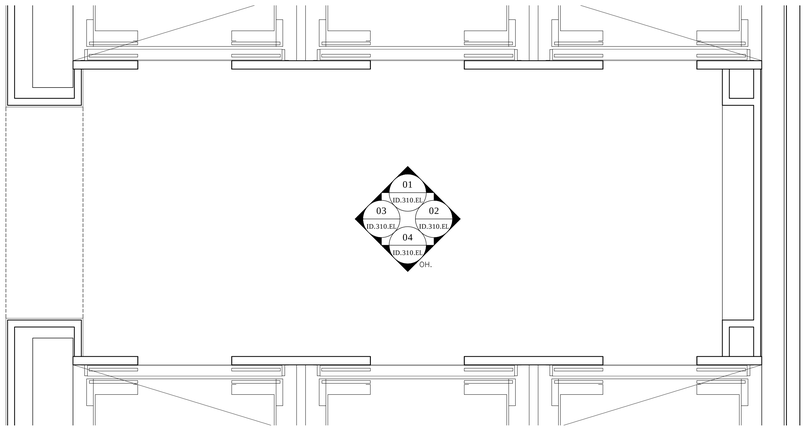

01 TYPICAL ELEVATOR LOBBY–FLOOR PLAN (FLOOR 19–22)
Scale: 1/2"=1'–0"

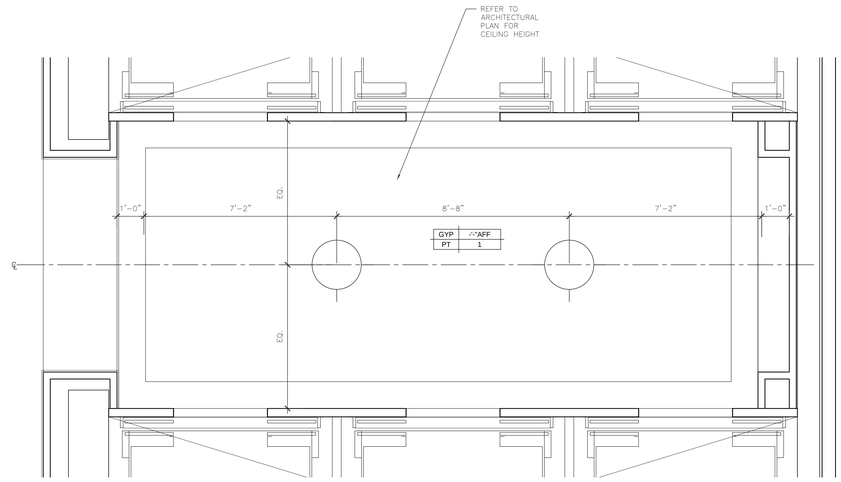

02 TYPICAL ELEVATOR LOBBY–REFLECTED CEILING PLAN (FLOOR 19–22)
Scale: 1/2"=1'–0"

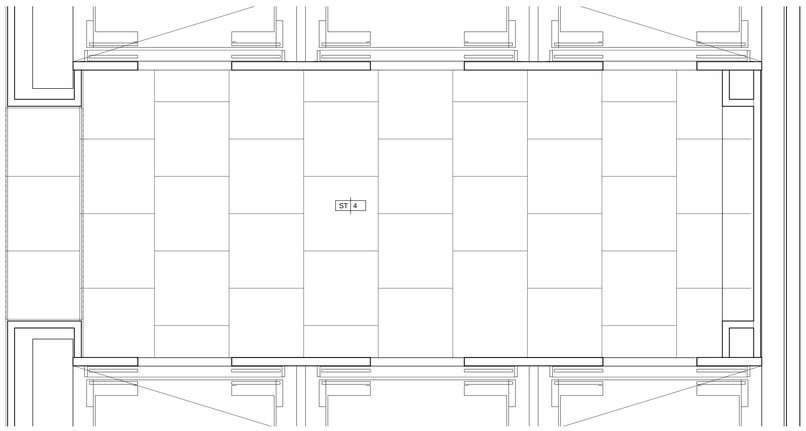

03 TYPICAL ELEVATOR LOBBY–FLOOR FINISH PLAN (FLOOR 19–22)
Scale: 1/2"=1'–0"

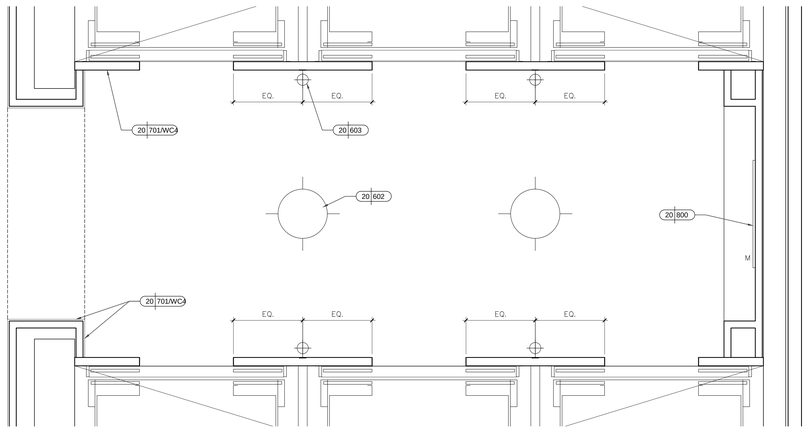

04 TYPICAL ELEVATOR LOBBY–FF&E / POWER LAYOUT PLAN (FLOOR 19–22)
Scale: 1/2"=1'–0"

KEY NOTES

SHEET NOTES

HILTON AMERICAS CONVENTION CENTER HOTEL

OWNER:

HOUSTON CONVENTION CENTER HOTEL CORPORATION

Two Houston Center
909 Fannin, Suite 3210
Houston TX 77010
Telephone 713.437.6898
Facsimile 713.437.6938

DEVELOPMENT MANAGER:

INTERIOR ARCHITECT:

Wilson Associates
Interior Architectural Design

3811 Turtle Creek Blvd.
16th Floor Dallas, Texas
75219 Tel (214) 521-6753
Fax (214) 521-0207

Issue	Date & Issue Description	By	Check
-- --	-- -- / -- -- / -- --	-- --	-- --

Seal/Signature

MEMBER INTERIOR DESIGNERS CONFERENCE PLANNERS COUNCIL 1433 STATE OF TEXAS

Constance H. Jackson 10-18-2018

Project Name

HILTON AMERICAS CONVENTION CENTER HOTEL

Project Number

4993

CAD File Name

ID.210.03.DWG

Description

ELEVATOR LOBBY ENLARGED PLAN–UPPER LEVELS

Scale

0 2" 4" 8" 16"

ID.210.03

©2001 Gensler

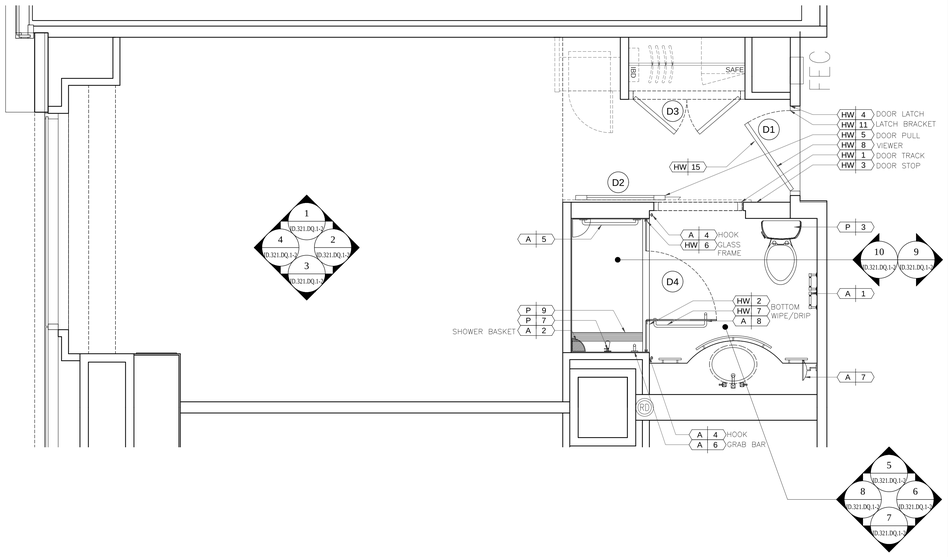

01 DQ-1 (SHOWER) GUESTROOM FLOOR PLAN
Scale: 1/2"=1'-0"

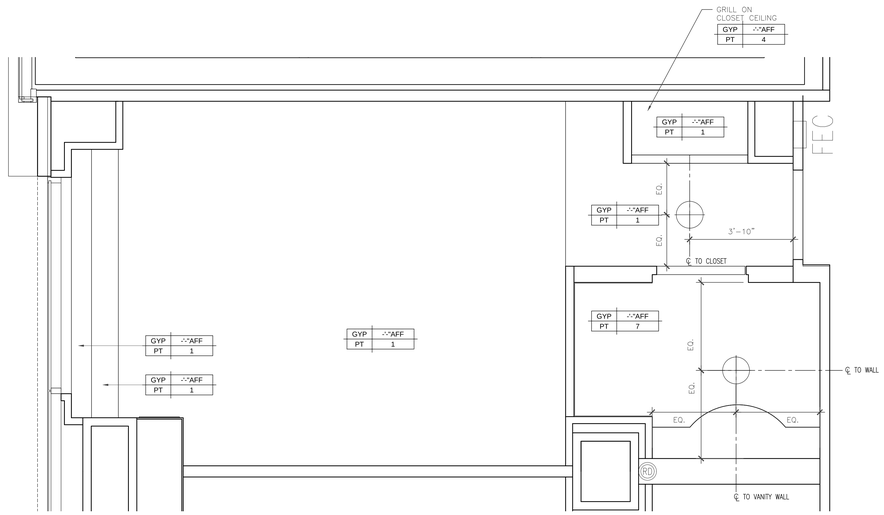

02 DQ-1 (SHOWER) GUESTROOM REFLECTED CEILING PLAN
Scale: 1/2"=1'-0"

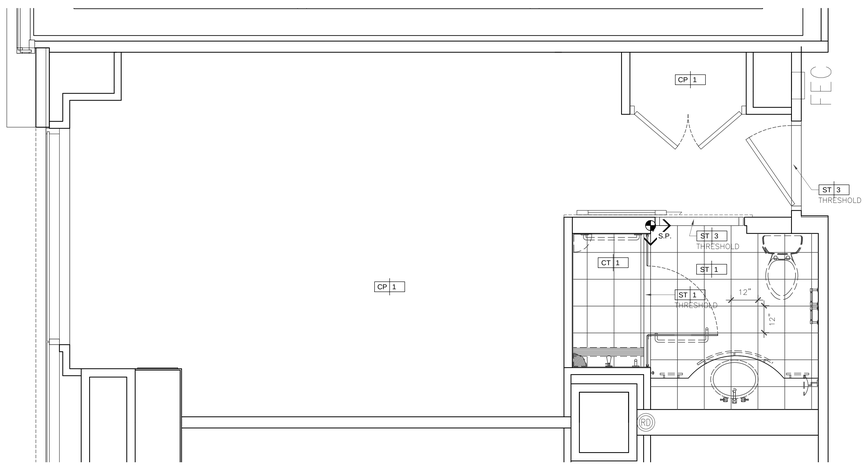

03 DQ-1 (SHOWER) GUESTROOM FLOOR COVERING PLAN
Scale: 1/2"=1'-0"

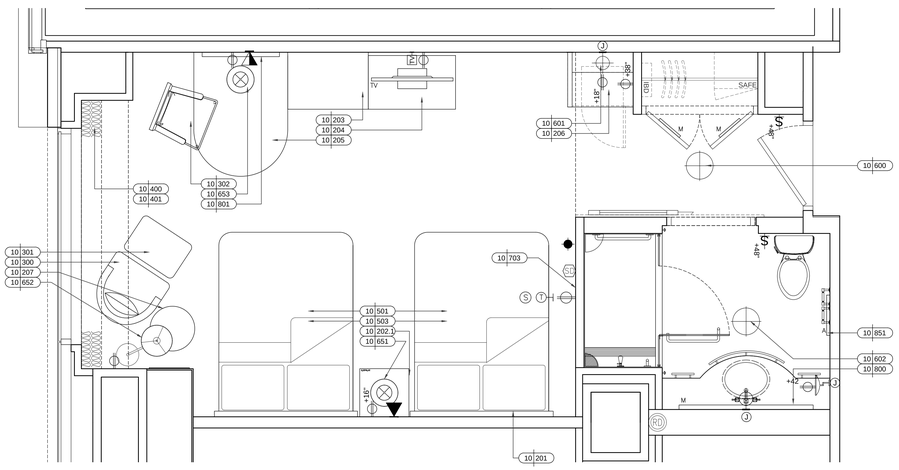

04 DQ-1 (SHOWER) GUESTROOM FURNISHING / POWER PLAN
Scale: 1/2"=1'-0"

KEY NOTES

SHEET NOTES

HILTON AMERICAS CONVENTION CENTER HOTEL

OWNER:
HOUSTON CONVENTION CENTER HOTEL CORPORATION
Two Houston Center
909 Fannin, Suite 3210
Houston TX 77010
Telephone 713.437.6898
Facsimile 713.437.6938

DEVELOPMENT MANAGER:

INTERIOR ARCHITECT:
Wilson Associates
Interior Architectural Design
3811 Turtle Creek Blvd.
16th Floor Dallas, Texas
75219 Tel (214) 521-6753
Fax (214) 521-0207

Issue	Date & Issue Description	By	Check
-- --	-- -- / -- -- / -- --	-- --	-- --

Seal/Signature

REGISTERED INTERIOR DESIGNER
CONSTANCE H. JACKSON
1433
STATE OF TEXAS

Constance H. Jackson
10-18-2018

Project Name
HILTON AMERICAS CONVENTION CENTER HOTEL

Project Number
4993

CAD File Name
ID.220.DQ1.DWG

Description
ENLARGED GUESTROOM PLAN
DOUBLE QUEEN-1 (SHOWER)

Scale
0 2" 4" 8" 16"

ID.220.DQ1

©2001 Gensler

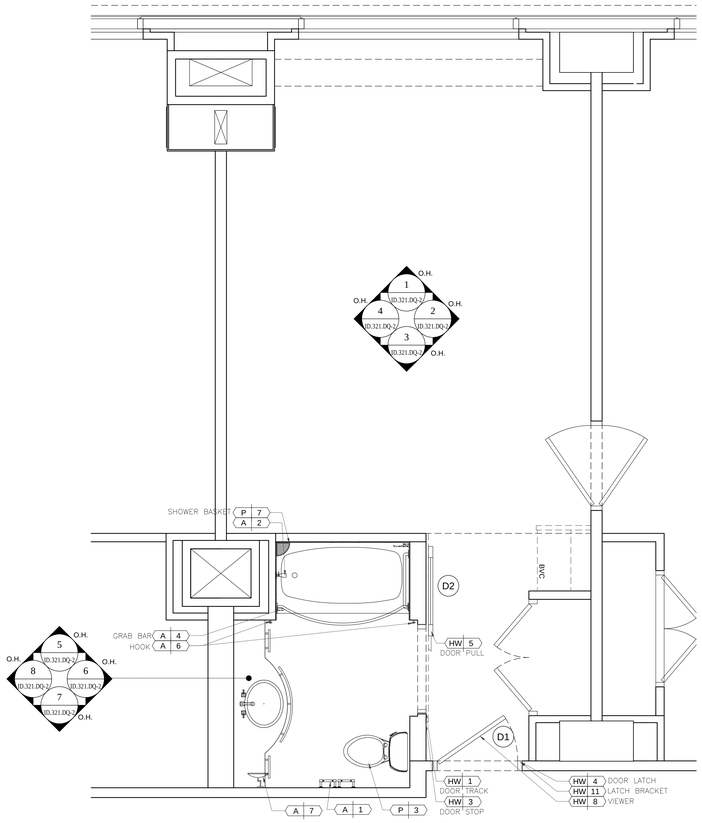

01 DQ-2 (TUB) GUESTROOM FLOOR PLAN
Scale: 1/2"=1'-0"

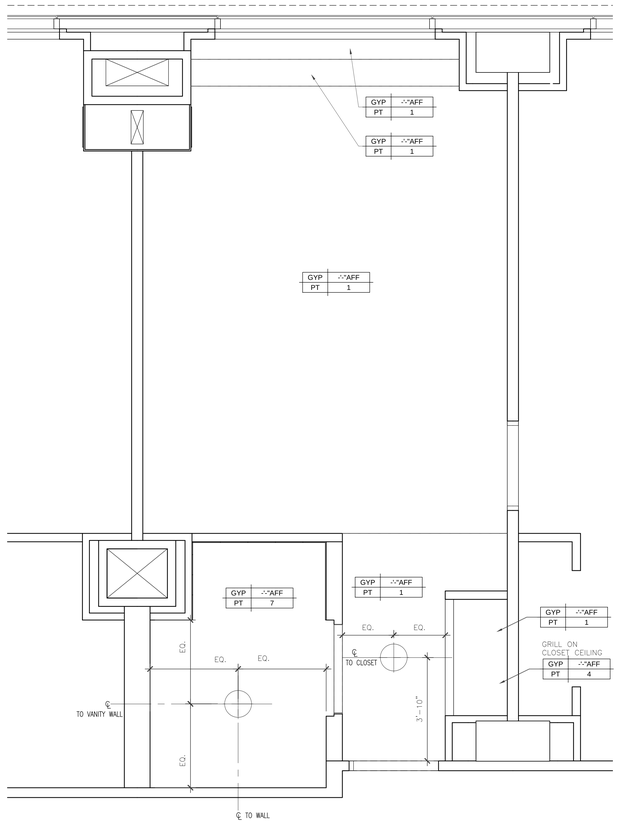

02 DQ-2 (TUB) GUESTROOM REFLECTED CEILING PLAN
Scale: 1/2"=1'-0"

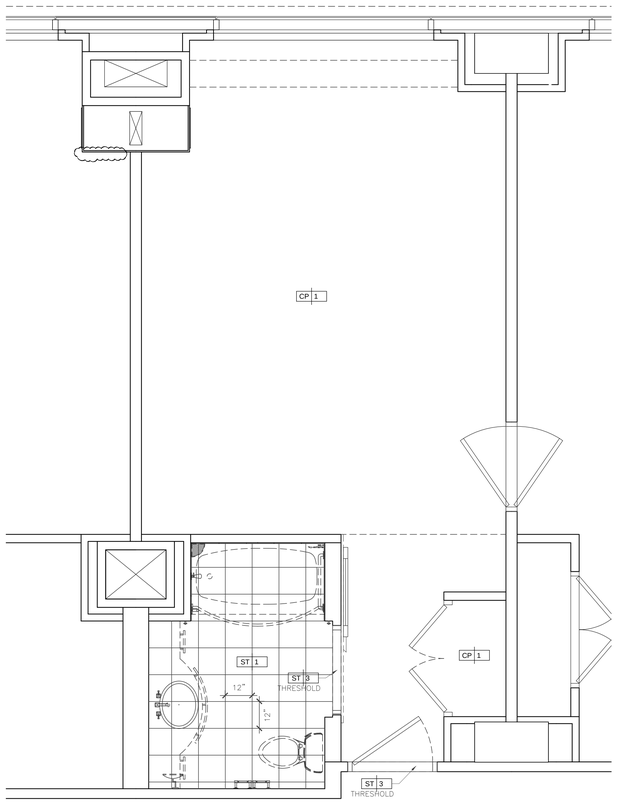

03 DQ-2 (TUB) GUESTROOM FLOOR COVERING PLAN
Scale: 1/2"=1'-0"

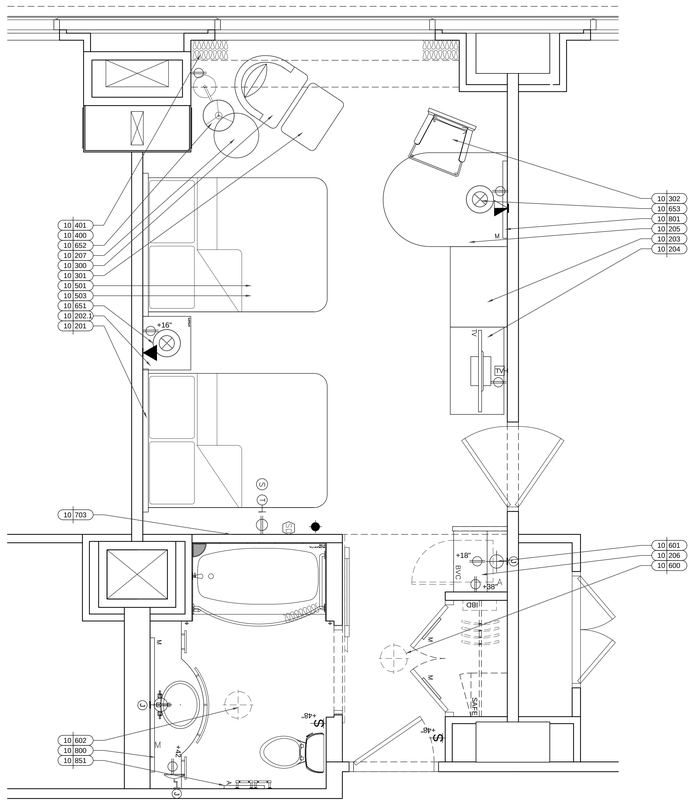

04 DQ-2 (TUB) GUESTROOM FURNISHING / POWER PLAN
Scale: 1/2"=1'-0"

KEY NOTES

SHEET NOTES

HILTON AMERICAS CONVENTION CENTER HOTEL

OWNER:

HOUSTON CONVENTION CENTER HOTEL CORPORATION

Two Houston Center
909 Fannin, Suite 3210
Houston TX 77010
Telephone 713.437.6898
Facsimile 713.437.6938

DEVELOPMENT MANAGER:

INTERIOR ARCHITECT:

Wilson Associates
Interior Architectural Design

3811 Turtle Creek Blvd.
16th Floor Dallas, Texas
75219 Tel (214) 521-6753
Fax (214) 521-0207

Issue	Date & Issue Description	By	Check
--	-- -- / -- -- / -- --	-- --	-- --

Seal/Signature

REGISTERED INTERIOR DESIGNER
CONSTANCE H. JACKSON
1433
STATE OF TEXAS

10-18-2018

Project Name
HILTON AMERICAS CONVENTION CENTER HOTEL

Project Number
4993

CAD File Name
ID.220.DQ2.DWG

Description
ENLARGED GUESTROOM PLAN
DOUBLE QUEEN-2 (TUB)

Scale
0 2" 4" 8" 16"

ID.220.DQ2

©2001 Gensler

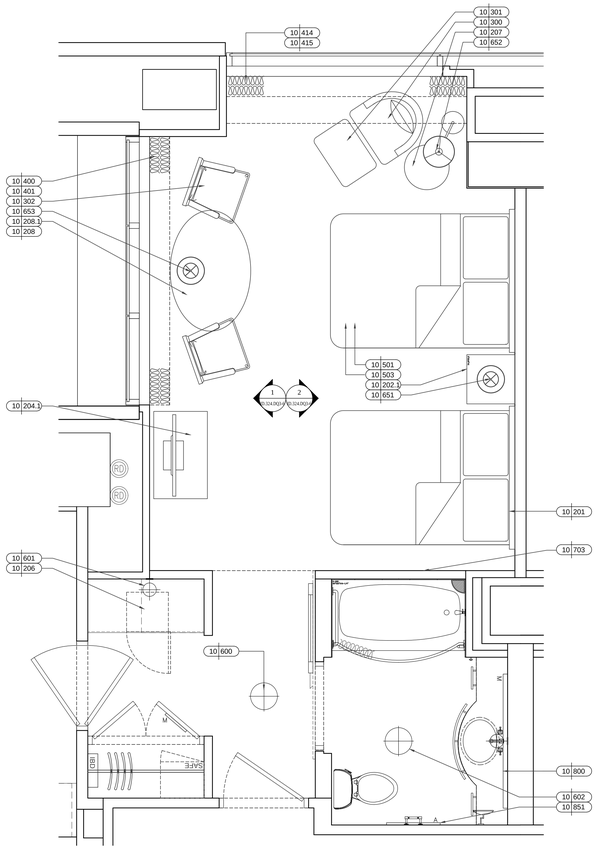

04 GUESTROOM DQ-3-FURNISHING PLAN
Scale: 1/2"=1'-0"

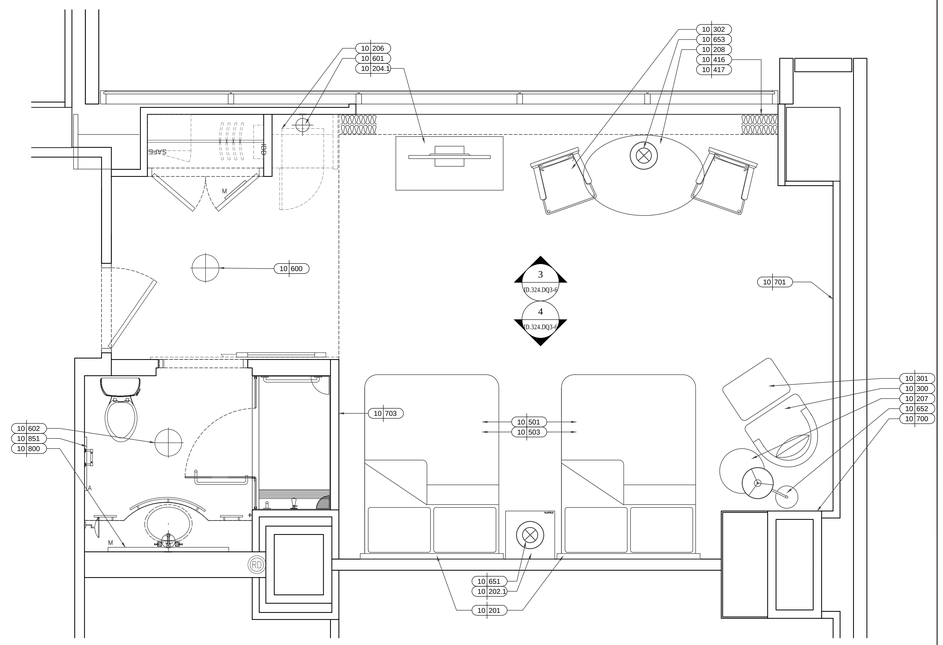

03 GUESTROOM DQ-4-FURNISHING PLAN
Scale: 1/2"=1'-0"

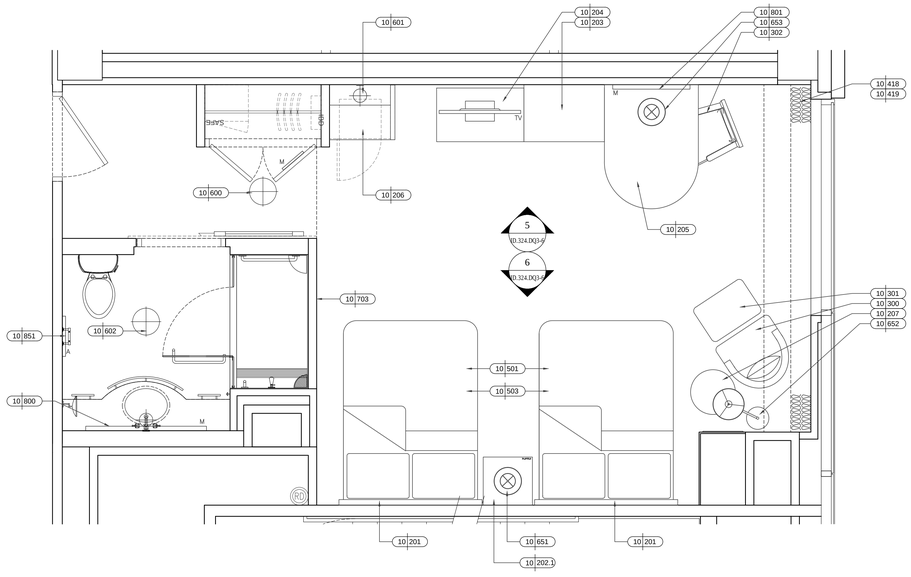

02 GUESTROOM DQ-5-FURNISHING PLAN
Scale: 1/2"=1'-0"

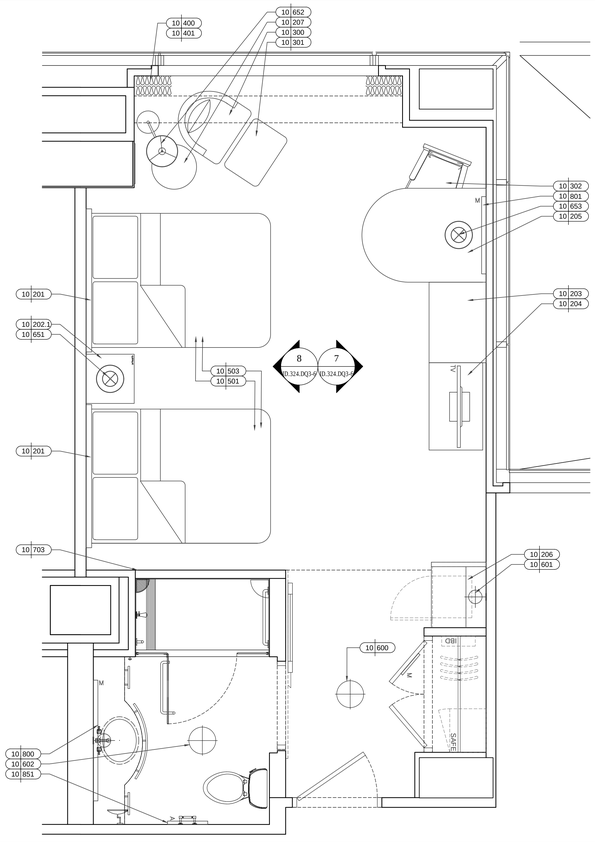

01 GUESTROOM DQ-6-FURNISHING PLAN
Scale: 1/2"=1'-0"

KEY NOTES

SHEET NOTES

HILTON AMERICAS CONVENTION CENTER HOTEL

OWNER:

HOUSTON CONVENTION CENTER HOTEL CORPORATION

Two Houston Center
909 Fannin, Suite 3210
Houston TX 77010
Telephone 713.437.6898
Facsimile 713.437.6938

DEVELOPMENT MANAGER:

INTERIOR ARCHITECT:

Wilson Associates
Interior Architectural Design

3811 Turtle Creek Blvd.
16th Floor Dallas, Texas
75219 Tel (214) 521-6753
Fax (214) 521-0207

Issue	Date & Issue Description	By	Check
-- --	-- -- / -- -- / -- --	-- --	-- --

Seal/Signature

REGISTERED INTERIOR DESIGNER
CONSTANCE H. JACKSON
1433
STATE OF TEXAS

Constance H. Jackson
10-18-2018

Project Name
HILTON AMERICAS CONVENTION CENTER HOTEL

Project Number
4993

CAD File Name
ID.220.DQ3-6.DWG

Description
ENLARGED DOUBLE GUESTROOM FURNITURE PLAN

Scale
0 2" 4" 8" 16"

ID.220.DQ3-6

© 2001 Gensler

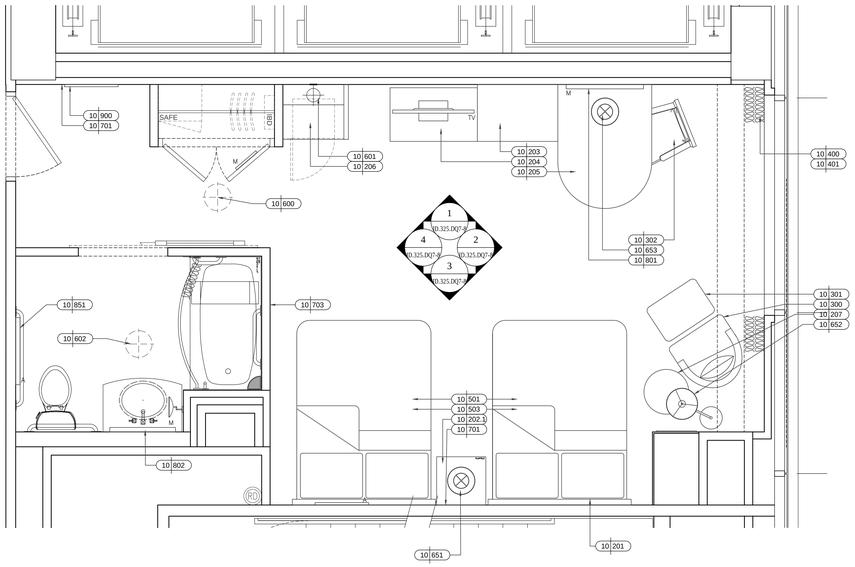

01 GUESTROOM DQ-7-FURNISHING PLAN
Scale: 1/2"=1'-0"

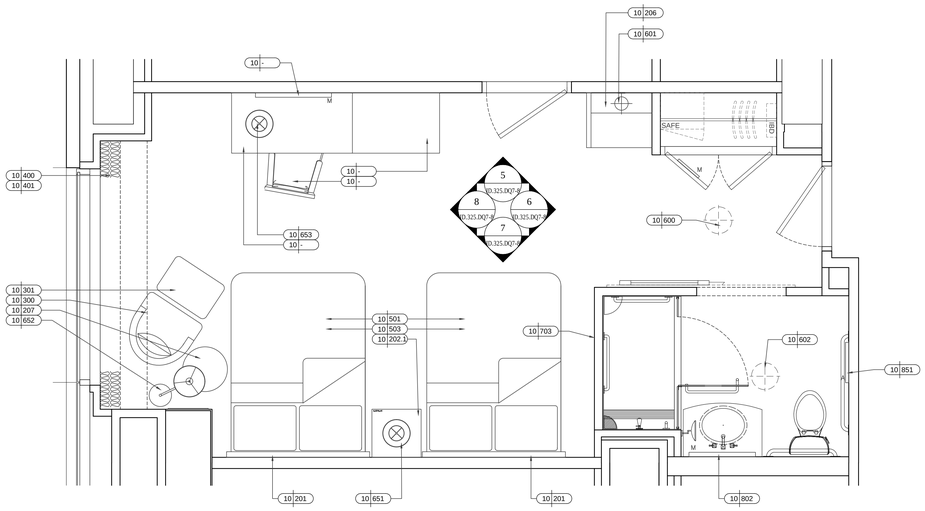

02 GUESTROOM DQ-8HC-FURNISHING PLAN
Scale: 1/2"=1'-0"

KEY NOTES

SHEET NOTES

HILTON AMERICAS CONVENTION CENTER HOTEL

OWNER:

HOUSTON CONVENTION CENTER HOTEL CORPORATION

Two Houston Center
909 Fannin, Suite 3210
Houston TX 77010
Telephone 713.437.6898
Facsimile 713.437.6938

DEVELOPMENT MANAGER:

INTERIOR ARCHITECT:

Wilson Associates
Interior Architectural Design

3811 Turtle Creek Blvd.
16th Floor Dallas, Texas
75219 Tel (214) 521-6753
Fax (214) 521-0207

△	Issue	Date & Issue Description	By	Check
	-- --	--/--/--	-- --	-- --

Seal/Signature

REGISTERED INTERIOR DESIGNER
CONSTANCE H. JACKSON
1433
STATE OF TEXAS

Constance H. Jackson 10-18-2018

Project Name
HILTON AMERICAS CONVENTION CENTER HOTEL

Project Number
4993

CAD File Name
ID.220.DQ7-8.DWG

Description
ENLARGED ADA GUESTROOM FURNITURE PLAN

Scale
0 2" 4" 8" 16"

ID.220.DQ7-8

©2001 Gensler

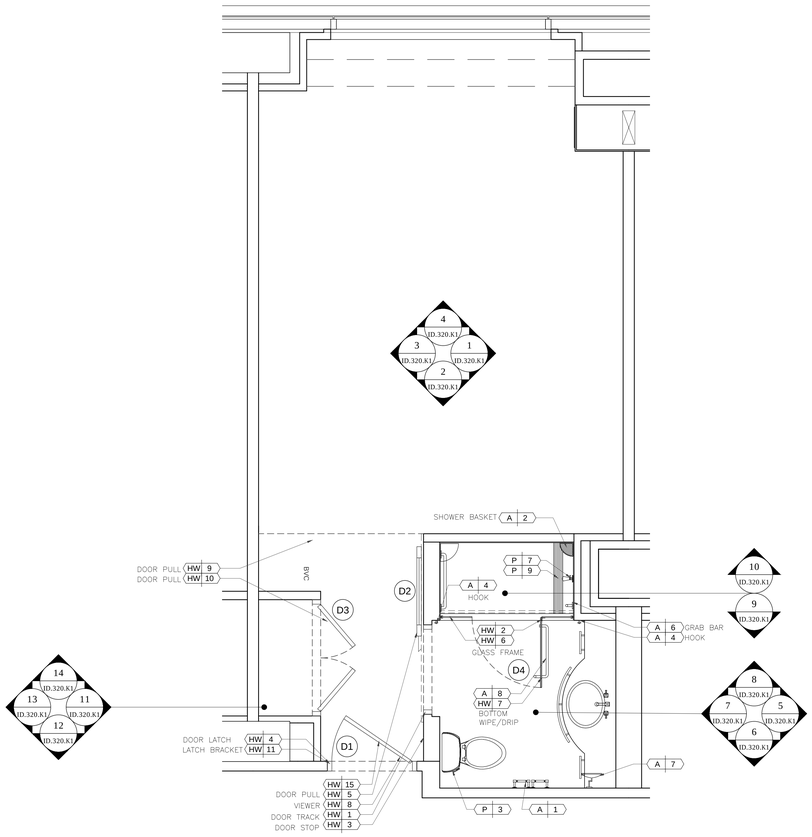

01 K-1 (SHOWER) GUESTROOM FLOOR PLAN
Scale: 1/2"=1'-0"

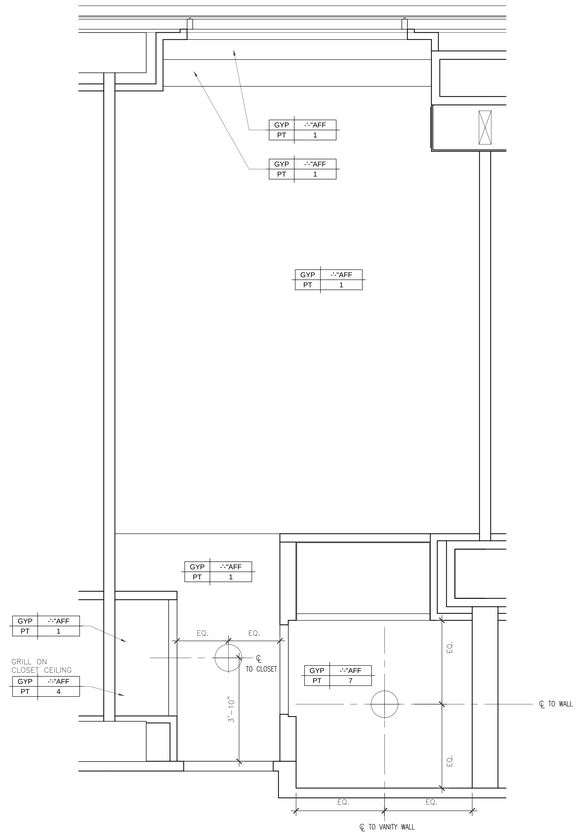

02 K-1 (SHOWER) GUESTROOM REFLECTED CEILING PLAN
Scale: 1/2"=1'-0"

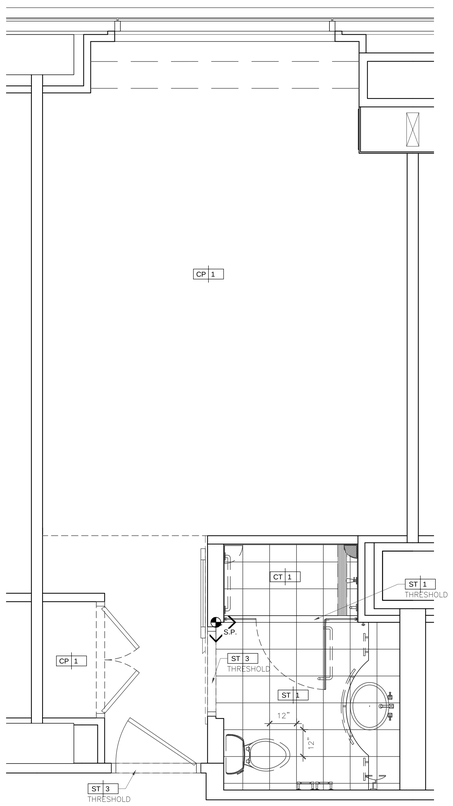

03 K-1 (SHOWER) GUESTROOM FLOOR COVERING PLAN
Scale: 1/2"=1'-0"

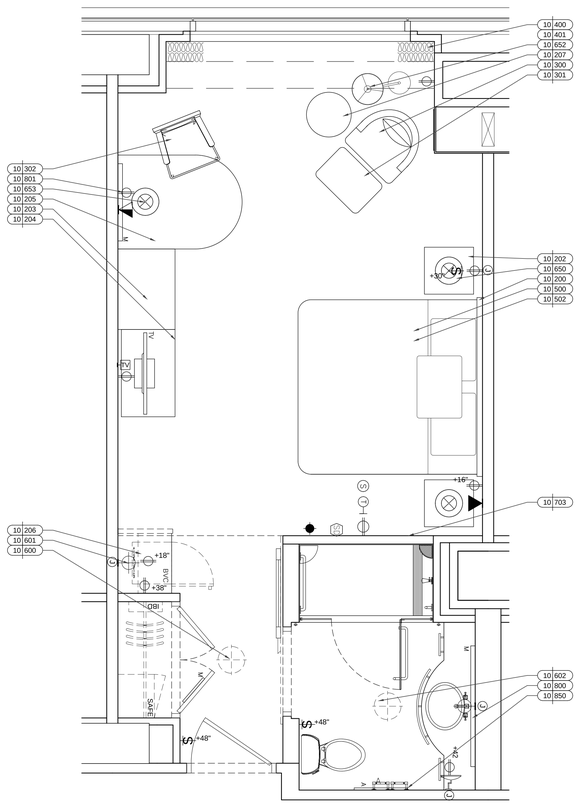

04 K-1 (SHOWER) GUESTROOM FURNISHING / POWER PLAN
Scale: 1/2"=1'-0"

KEY NOTES

SHEET NOTES

HILTON AMERICAS CONVENTION CENTER HOTEL

OWNER:

HOUSTON CONVENTION CENTER HOTEL CORPORATION

Two Houston Center
909 Fannin, Suite 3210
Houston TX 77010
Telephone 713.437.6898
Facsimile 713.437.6938

DEVELOPMENT MANAGER:

INTERIOR ARCHITECT:

Wilson Associates
Interior Architectural Design

3811 Turtle Creek Blvd.
16th Floor Dallas, Texas
75219 Tel (214) 521-6753
Fax (214) 521-0207

Issue	Date & Issue Description	By	Check
--	-- -- / -- -- / -- --	--	--

Seal/Signature

REGISTERED INTERIOR DESIGNER
CONSTANCE H. GAULKSON
1433
STATE OF TEXAS

10-18-2018

Project Name
HILTON AMERICAS CONVENTION CENTER HOTEL

Project Number
4993

CAD File Name
ID.220.K1.DWG

Description
ENLARGED GUESTROOM PLAN
TYPICAL KING-1 (SHOWER)

Scale
0 2" 4" 8" 16"

ID.220.K1

© 2001 Gensler

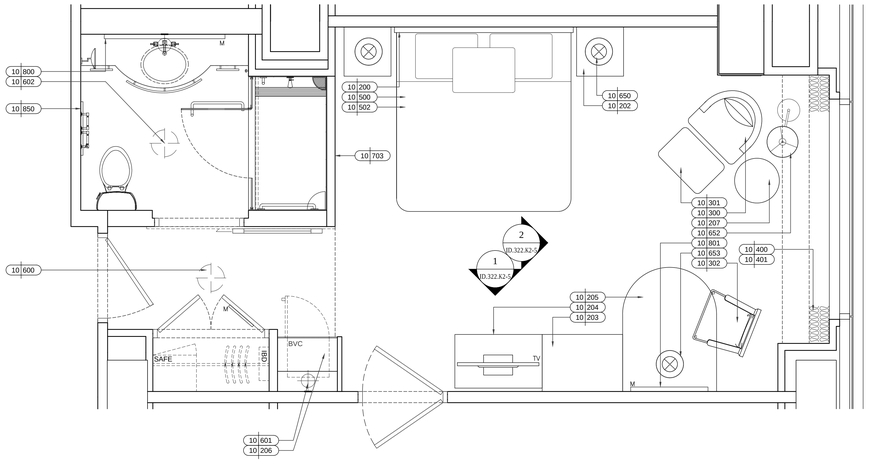

1 GUESTROOM (K2) FURNITURE PLAN
Scale: 1/2"=1'-0"

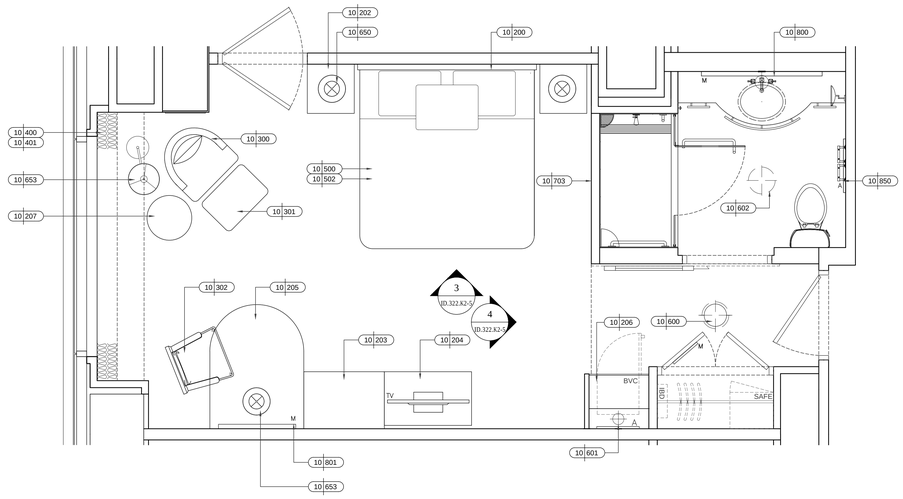

2 GUESTROOM (K3) FURNITURE PLAN
Scale: 1/2"=1'-0"

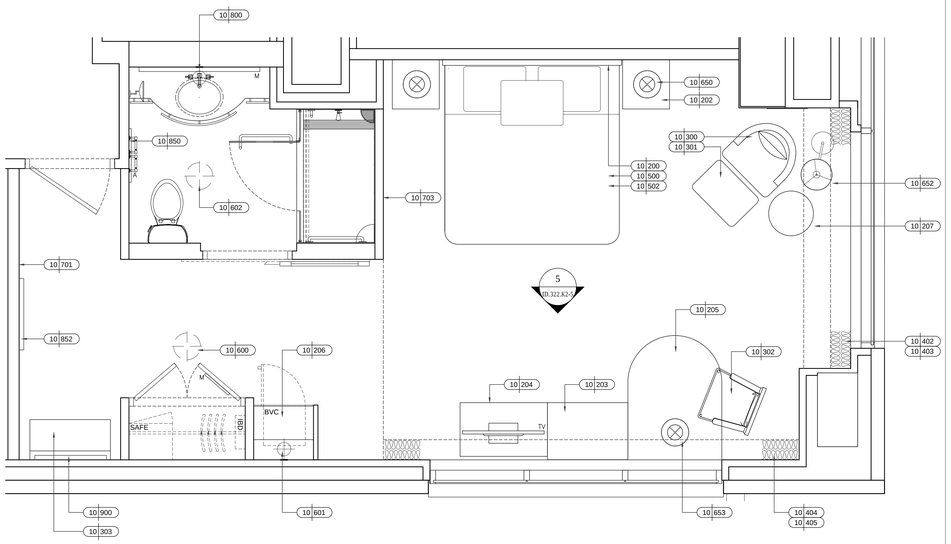

3 GUESTROOM (K4) FURNITURE PLAN
Scale: 1/2"=1'-0"

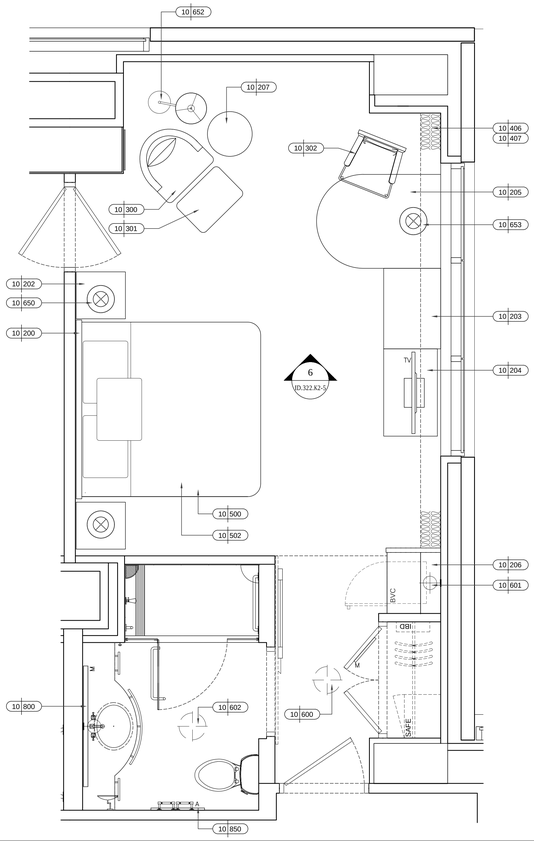

4 GUESTROOM (K5) FURNITURE PLAN
Scale: 1/2"=1'-0"

KEY NOTES

SHEET NOTES

HILTON AMERICAS CONVENTION CENTER HOTEL

OWNER:

HOUSTON CONVENTION CENTER HOTEL CORPORATION

Two Houston Center
909 Fannin, Suite 3210
Houston TX 77010
Telephone 713.437.6898
Facsimile 713.437.6938

DEVELOPMENT MANAGER:

INTERIOR ARCHITECT:

Wilson Associates
Interior Architectural Design

3811 Turtle Creek Blvd.
16th Floor Dallas, Texas
75219 Tel (214) 521-6753
Fax (214) 521-0207

Issue	Date & Issue Description	By	Check
-- --	-- -- / -- -- / -- --	-- --	-- --

Seal/Signature

REGISTERED INTERIOR DESIGNER
CONSTANCE H. JACKSON
1433
STATE OF TEXAS

10-18-2018

Project Name

HILTON AMERICAS CONVENTION CENTER HOTEL

Project Number

4993

CAD File Name

ID.220.K2-5.DWG

Description

ENLARGED GUESTROOM FURNITURE PLAN

Scale

0 2" 4" 8" 16"

ID.220.K2-5

©2001 Gensler

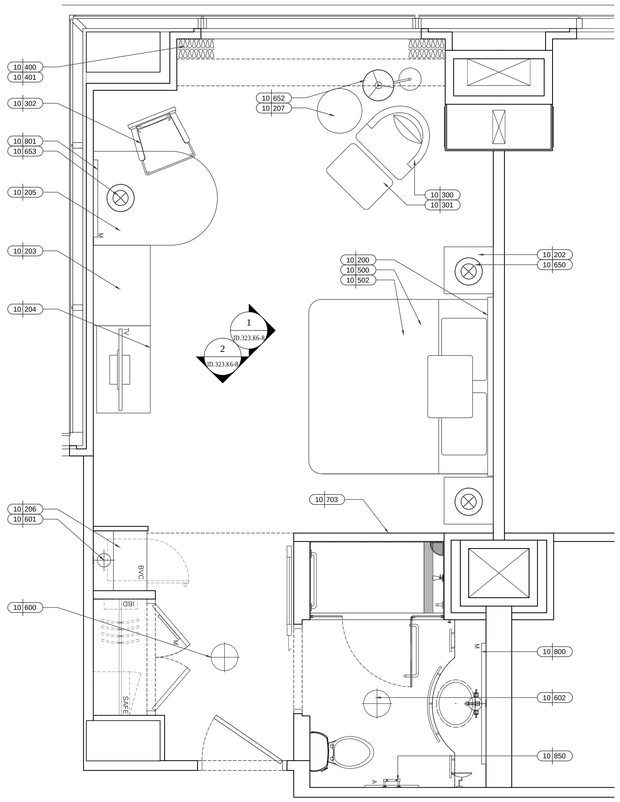

1 GUESTROOM (K6) FURNITURE PLAN
Scale: 1/2"=1'-0"

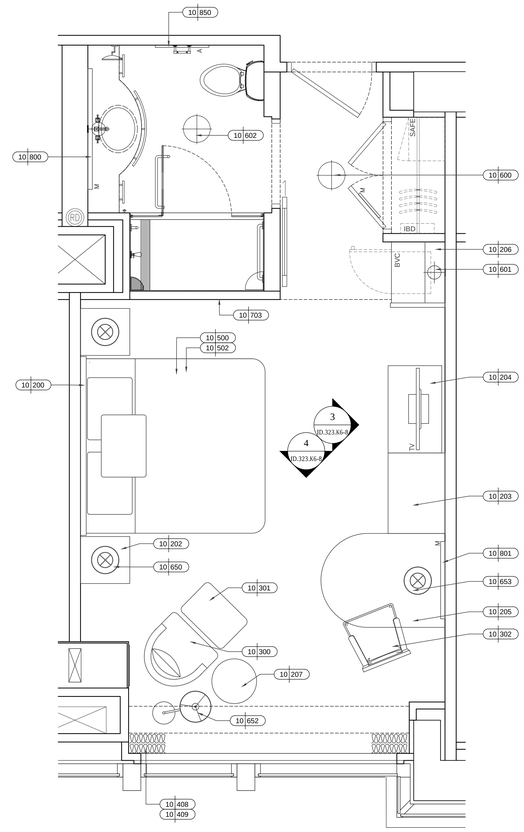

2 GUESTROOM (K7) FURNITURE PLAN
Scale: 1/2"=1'-0"

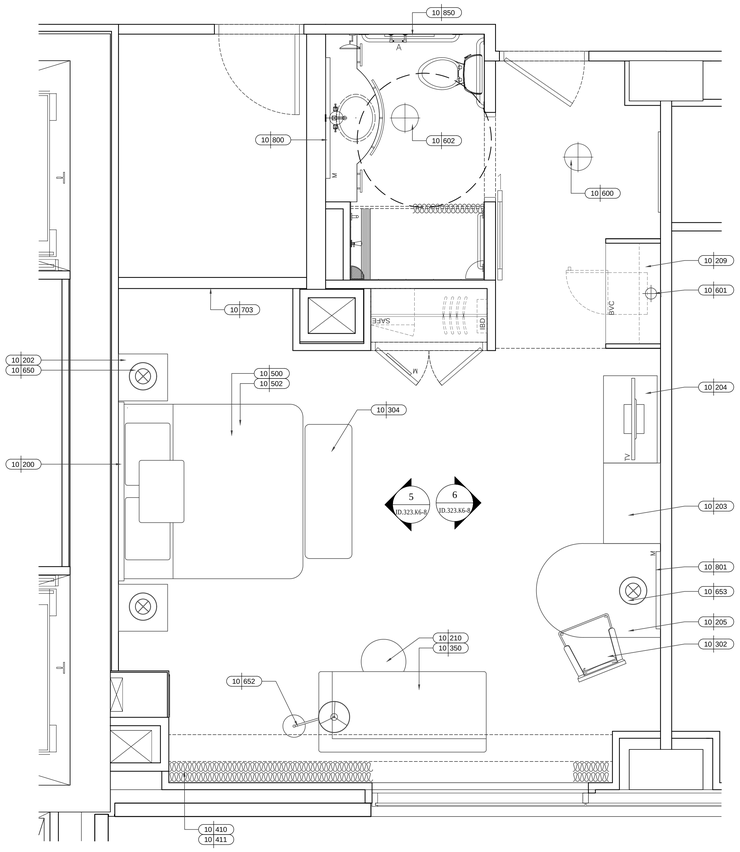

3 GUESTROOM (K-8HC) FURNITURE PLAN
Scale: 1/2"=1'-0"

KEY NOTES

SHEET NOTES

HILTON AMERICAS CONVENTION CENTER HOTEL

OWNER:

HOUSTON CONVENTION CENTER HOTEL CORPORATION

Two Houston Center
909 Fannin, Suite 3210
Houston TX 77010
Telephone 713.437.6898
Facsimile 713.437.6938

DEVELOPMENT MANAGER:

INTERIOR ARCHITECT:

Wilson Associates
Interior Architectural Design

3811 Turtle Creek Blvd.
16th Floor Dallas, Texas
75219 Tel (214) 521-6753
Fax (214) 521-0207

Issue	Date & Issue Description	By	Check
-- --	-- -- / -- -- / -- --	-- --	-- --

Seal/Signature

REGISTERED INTERIOR DESIGNER
CONSTANCE H. JACKSON
1433
STATE OF TEXAS

10-18-2018

Project Name

HILTON AMERICAS CONVENTION CENTER HOTEL

Project Number

4993

CAD File Name

ID.220.K6-8.DWG

Description

ENLARGED GUESTROOM PLAN
K-6, K-7HC, K-8HC

Scale

0 2" 4" 8" 16"

ID.220.K6-8

©2001 Gensler

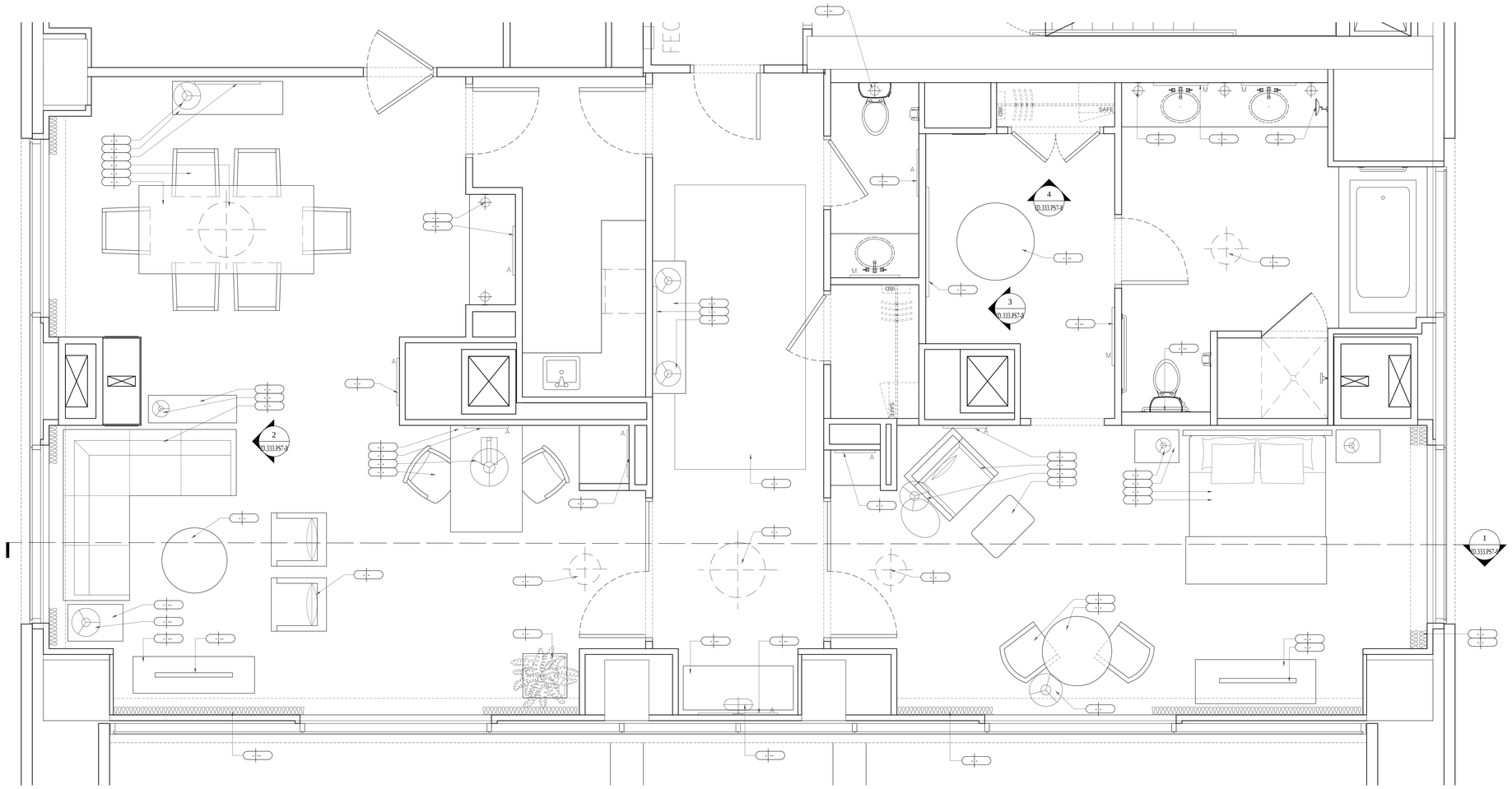

5 CHAIRMAN'S SUITE S-7-FURNISHING PLAN
Scale: 1/2"=1'-0"

KEY NOTES

SHEET NOTES

HILTON AMERICAS CONVENTION CENTER HOTEL

OWNER:

HOUSTON CONVENTION CENTER HOTEL CORPORATION

Two Houston Center
909 Fannin, Suite 3210
Houston TX 77010
Telephone 713.437.6898
Facsimile 713.437.6938

DEVELOPMENT MANAGER:

INTERIOR ARCHITECT:

Wilson Associates
Interior Architectural Design

3811 Turtle Creek Blvd.
16th Floor Dallas, Texas
75219 Tel (214) 521-6753
Fax (214) 521-0207

Issue	Date & Issue Description	By	Check
--	--/--/--	--	--

Seal/Signature

REGISTERED INTERIOR DESIGNER
CONSTANCE H. JACKSON
1433
STATE OF TEXAS

Constance H. Jackson 10-18-2018

Project Name

HILTON AMERICAS CONVENTION CENTER HOTEL

Project Number

4993

CAD File Name

ID.220.PRS7.DWG

Description

ENLARGED GUESTROOM PLAN
CHAIRMAN'S SUITE S-7 FURNISHING PLAN

Scale

0 2" 4" 8" 16"

ID.220.PRS7

©2001 Gensler

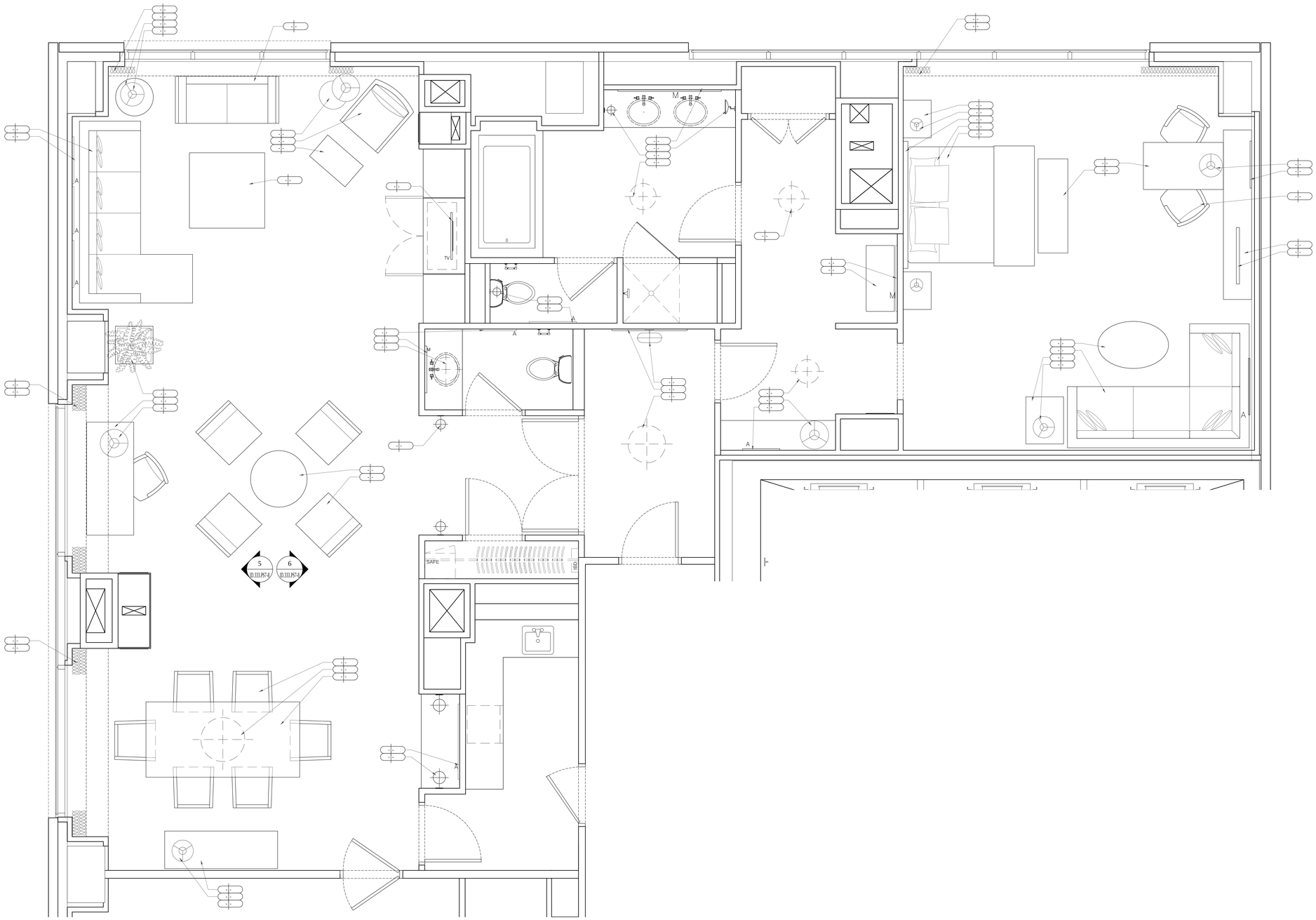

01 PRESIDENTIAL SUITE S-8-FURNISHING PLAN
Scale: 1/2"=1'-0"

KEY NOTES

SHEET NOTES

HILTON AMERICAS CONVENTION CENTER HOTEL

OWNER:

HOUSTON CONVENTION CENTER HOTEL CORPORATION

Two Houston Center
909 Fannin, Suite 3210
Houston TX 77010
Telephone 713.437.6898
Facsimile 713.437.6938

DEVELOPMENT MANAGER:

INTERIOR ARCHITECT:

Wilson Associates
Interior Architectural Design

3811 Turtle Creek Blvd.
16th Floor Dallas, Texas
75219 Tel (214) 521-6753
Fax (214) 521-0207

Issue	Date & Issue Description	By	Check
--	--/--/--	--	--

Seal/Signature

REGISTERED INTERIOR DESIGNER CONSTANCE H. JACKSON 1433 STATE OF TEXAS

Constance H. Jackson 10-18-2018

Project Name
HILTON AMERICAS CONVENTION CENTER HOTEL

Project Number
4993

CAD File Name
ID.220.PRS8.DWG

Description
ENLARGED GUESTROOM PLAN
PRESIDENTIAL SUITE S-8-FURNISHING PLAN

Scale
0 2" 4" 8" 16"

ID.220.PRS8

©2001 Gensler

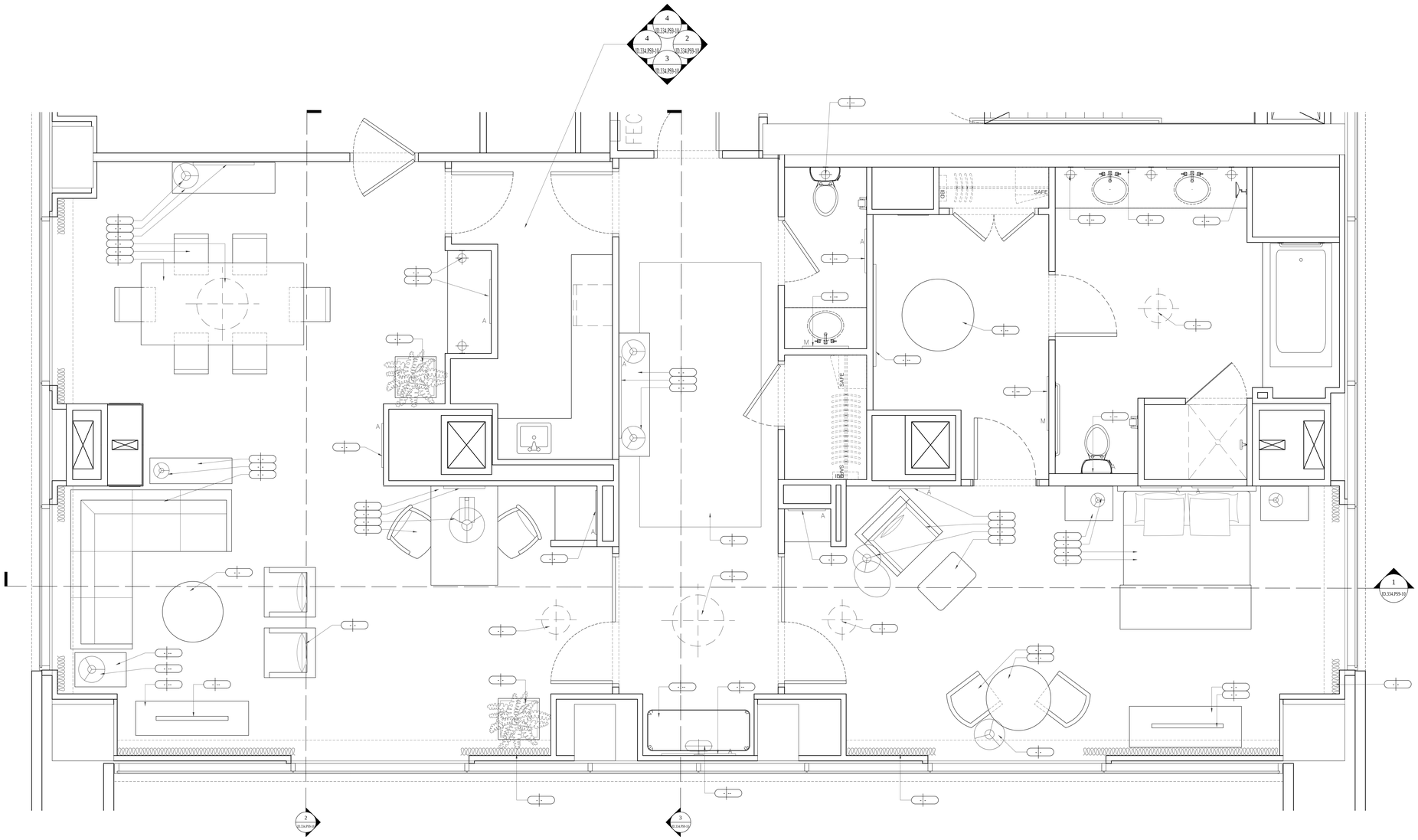

5 EXECUTIVE SUITE S-9HC-FURNISHING PLAN
Scale: 1/2"=1'-0"

KEY NOTES

SHEET NOTES

HILTON AMERICAS CONVENTION CENTER HOTEL

OWNER:

HOUSTON CONVENTION CENTER HOTEL CORPORATION

Two Houston Center
909 Fannin, Suite 3210
Houston TX 77010
Telephone 713.437.6898
Facsimile 713.437.6938

DEVELOPMENT MANAGER:

INTERIOR ARCHITECT:

Wilson Associates
Interior Architectural Design

3811 Turtle Creek Blvd.
16th Floor Dallas, Texas
75219 Tel (214) 521-6753
Fax (214) 521-0207

Issue	Date & Issue Description	By	Check
--	-- -- / -- -- / -- --	--	--

Seal/Signature

REGISTERED INTERIOR DESIGNER
CONSTANCE H. JACKSON
1433
STATE OF TEXAS

Constance H. Jackson 10-18-2018

Project Name
HILTON AMERICAS CONVENTION CENTER HOTEL

Project Number
4993

CAD File Name
ID.220.PRS9.DWG

Description
ENLARGED GUESTROOM SUITE
EXECUTIVE SUITE (HC), FLOOR 21

Scale
0 2" 4" 8" 16"

ID.220.PRS9

©2001 Gensler

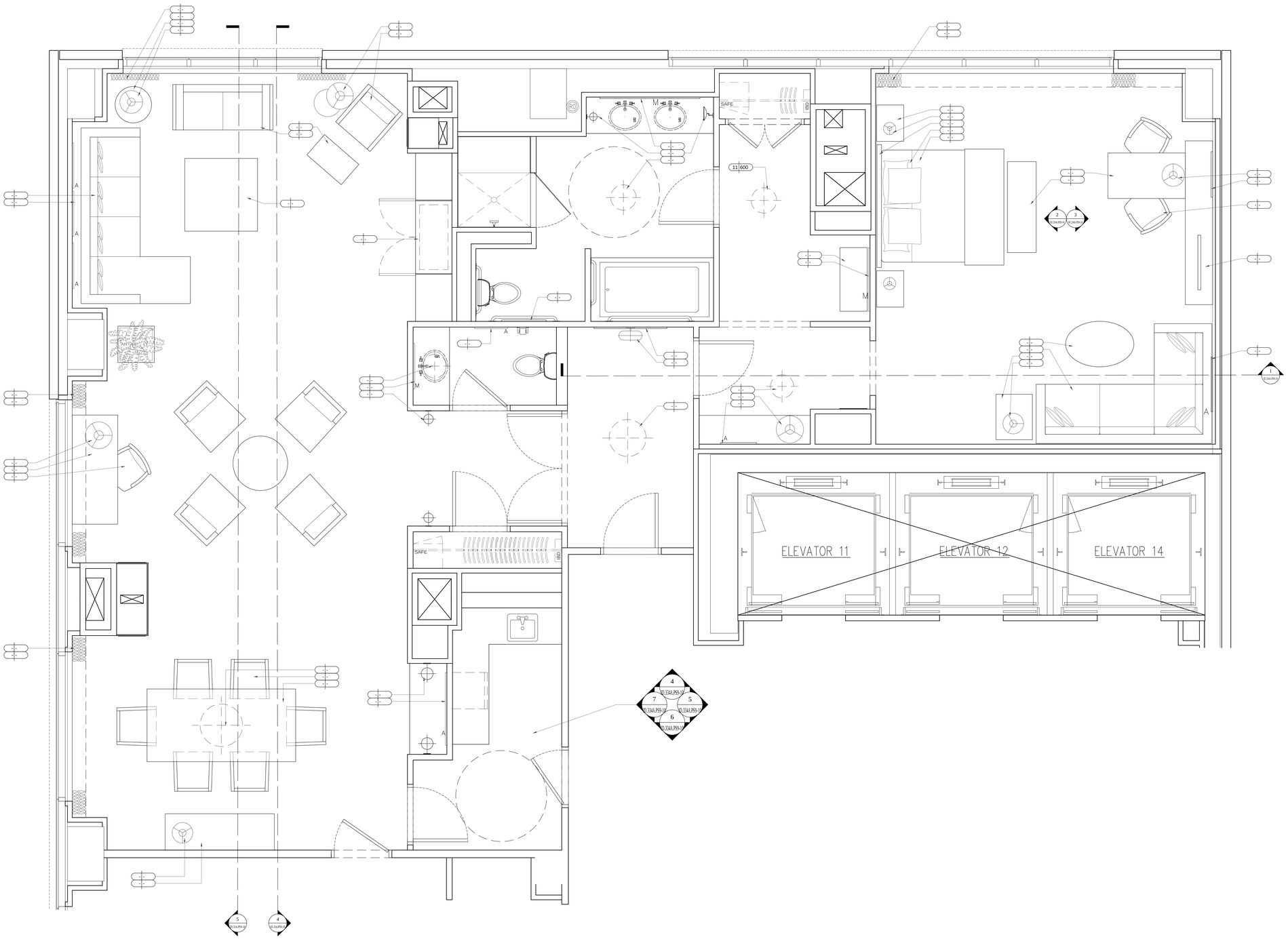

01 PRESIDENTIAL SUITE S-10HC-FURNISHING PLAN
Scale: 1/2"=1'-0"

KEY NOTES

SHEET NOTES

HILTON AMERICAS CONVENTION CENTER HOTEL

OWNER:

HOUSTON CONVENTION CENTER HOTEL CORPORATION

Two Houston Center
909 Fannin, Suite 3210
Houston TX 77010
Telephone 713.437.6898
Facsimile 713.437.6938

DEVELOPMENT MANAGER:

INTERIOR ARCHITECT:

Wilson Associates
Interior Architectural Design

3811 Turtle Creek Blvd.
16th Floor Dallas, Texas
75219 Tel (214) 521-6753
Fax (214) 521-0207

Issue	Date & Issue Description	By	Check
--	--/--/--	--	--

Seal/Signature

REGISTERED INTERIOR DESIGNER
CONSTANCE H. JACKSON
1433
STATE OF TEXAS

Constance H. Jackson 10-18-2018

Project Name

HILTON AMERICAS CONVENTION CENTER HOTEL

Project Number

4993

CAD File Name

ID.220.PRS10.DWG

Description

ENLARGED GUESTROOM PLAN
PRESIDENTIAL SUITE S-10HC-FURNISHING PLAN

Scale

0 2" 4" 8" 16"

ID.220.PRS10

©2001 Gensler

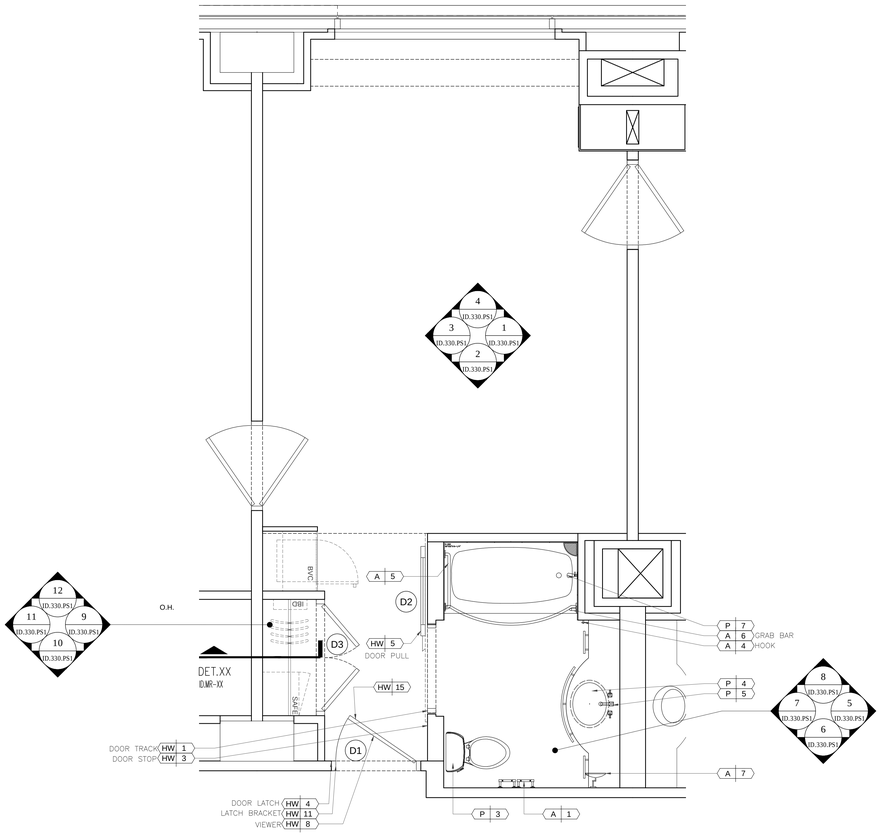

1 PARLOR S-1 GUESTROOM FLOOR PLAN
Scale: 1/2"=1'-0"

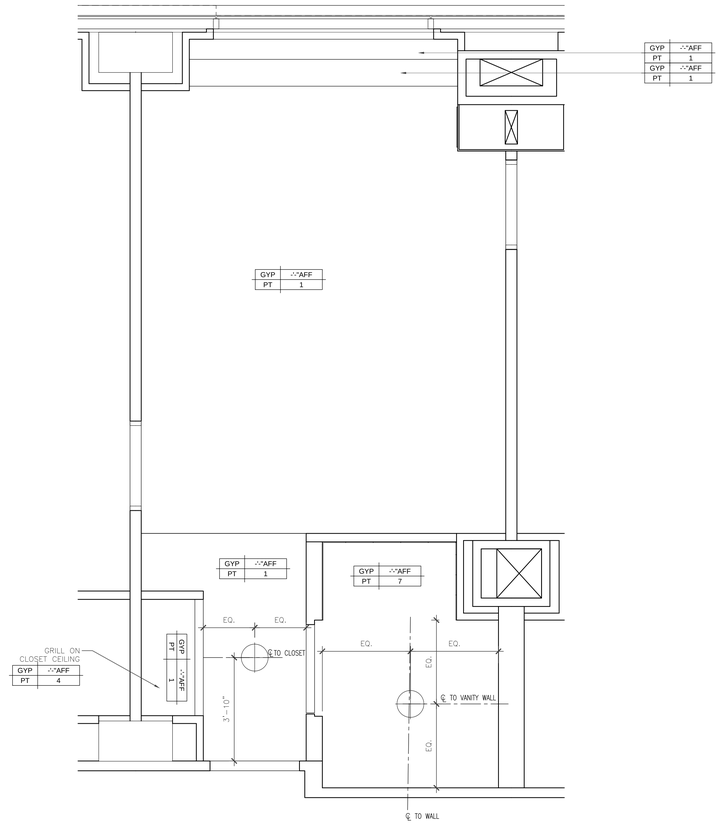

2 PARLOR S-1 GUESTROOM REFLECTED CEILING PLAN
Scale: 1/2"=1'-0"

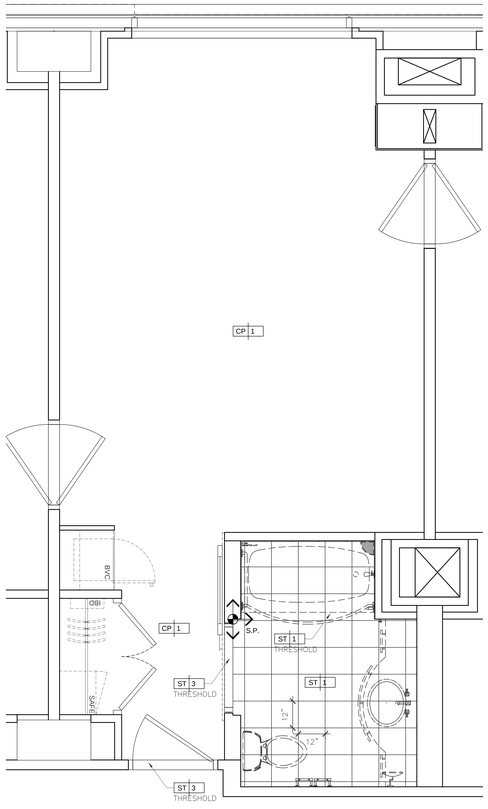

3 PARLOR S-1 GUESTROOM FLOOR COVERING PLAN
Scale: 1/2"=1'-0"

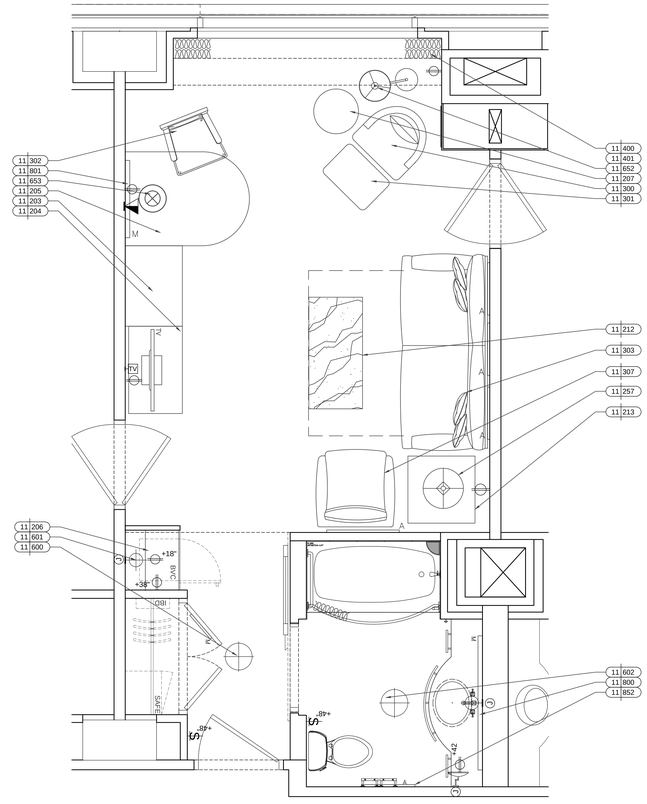

4 PARLOR S-1 GUESTROOM FURNISHING / POWER PLAN
Scale: 1/2"=1'-0"

KEY NOTES

SHEET NOTES

HILTON AMERICAS CONVENTION CENTER HOTEL

OWNER:

HOUSTON CONVENTION CENTER HOTEL CORPORATION

Two Houston Center
909 Fannin, Suite 3210
Houston TX 77010
Telephone 713.437.6898
Facsimile 713.437.6938

DEVELOPMENT MANAGER:

INTERIOR ARCHITECT:

Wilson Associates
Interior Architectural Design

3811 Turtle Creek Blvd.
16th Floor Dallas, Texas
75219 Tel (214) 521-6753
Fax (214) 521-0207

Issue	Date & Issue Description	By	Check
--	-- -/-- -/-- --	--	--

Seal/Signature

REGISTERED INTERIOR DESIGNER
CONSTANCE H. GALLEGOS
1433
STATE OF TEXAS

Constance H. Gallegos
10-18-2018

Project Name
HILTON AMERICAS CONVENTION CENTER HOTEL

Project Number
4993

CAD File Name
ID.220.PS1.DWG

Description
ENLARGED GUESTROOM PLAN
PARLOR S-1

Scale
0 2" 4" 8" 16"

ID.220.PS1

© 2001 Gensler

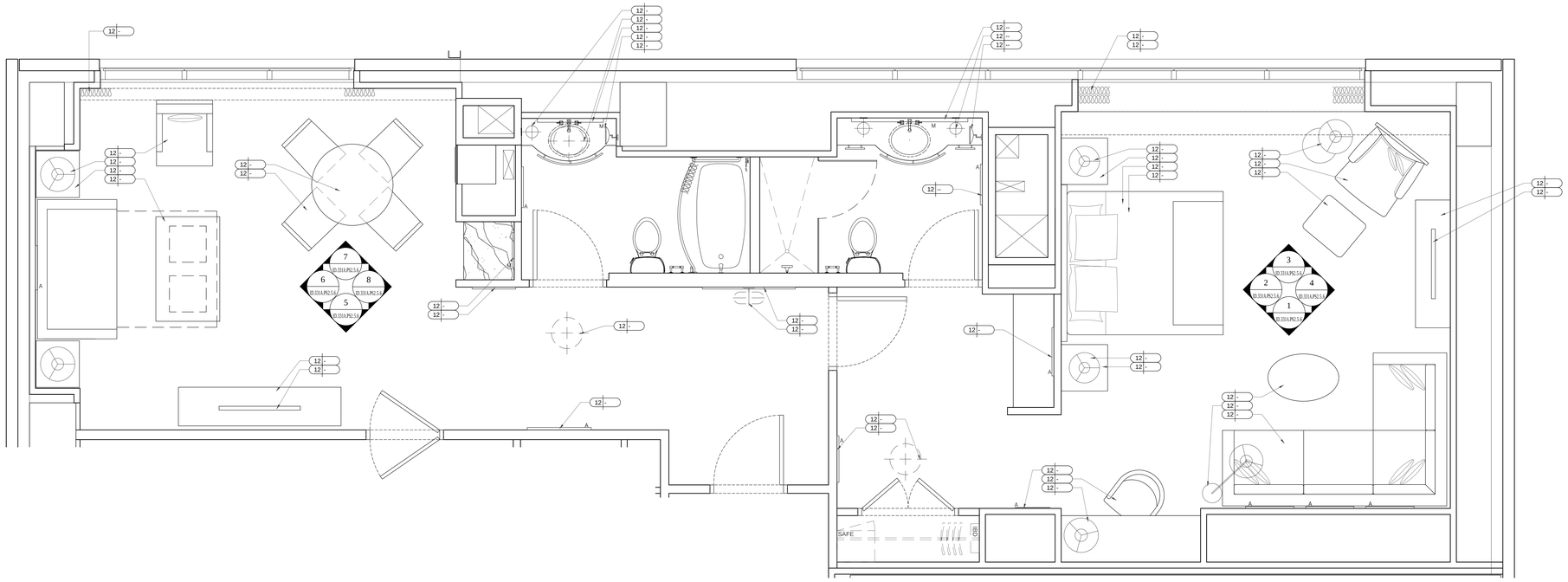

01 LAMAR SUITE S-5-FURNISHING PLAN
Scale: 1/2"=1'-0"

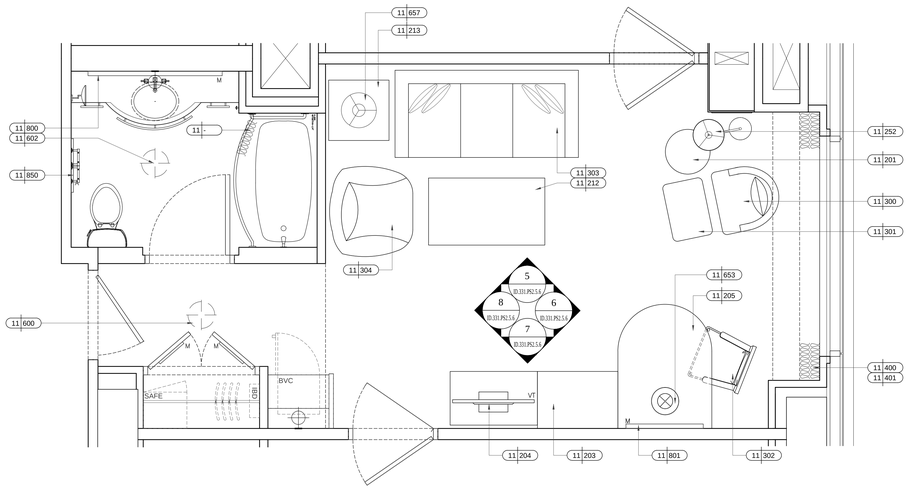

02 PARLOR S-6-FURNISHING PLAN
Scale: 1/2"=1'-0"

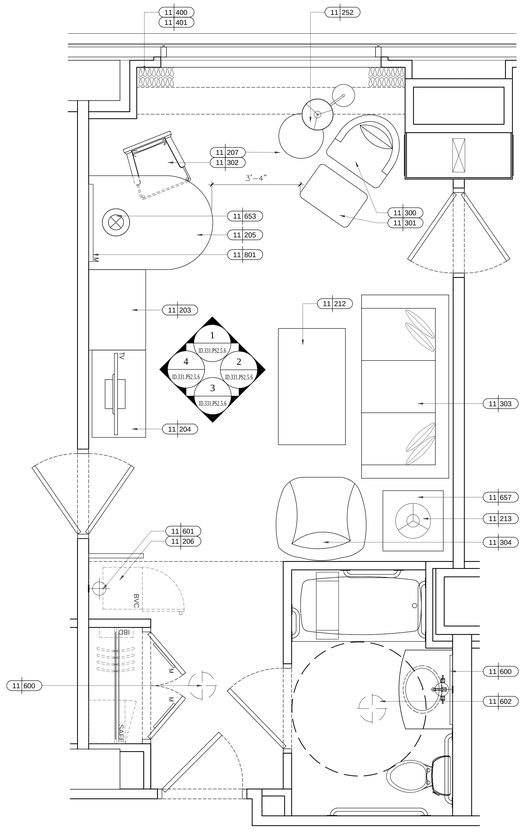

03 PARLOR S-2HC-FURNISHING PLAN
Scale: 1/2"=1'-0"

KEY NOTES

SHEET NOTES

HILTON AMERICAS CONVENTION CENTER HOTEL

OWNER:

HOUSTON CONVENTION CENTER HOTEL CORPORATION

Two Houston Center
909 Fannin, Suite 3210
Houston TX 77010
Telephone 713.437.6898
Facsimile 713.437.6938

DEVELOPMENT MANAGER:

INTERIOR ARCHITECT:

Wilson Associates
Interior Architectural Design

3811 Turtle Creek Blvd.
16th Floor Dallas, Texas
75219 Tel (214) 521-6753
Fax (214) 521-0207

Issue	Date & Issue Description	By	Check
--	-- -- / -- -- / -- --	--	--

Seal/Signature

REGISTERED INTERIOR DESIGNER
CONSTANCE H. JACKSON
1433
STATE OF TEXAS

Constance H. Jackson 10-18-2018

Project Name
HILTON AMERICAS CONVENTION CENTER HOTEL

Project Number
4993

CAD File Name
ID.220.PS2.6.5.DWG

Description
ENLARGED ADA GUESTROOM FURNITURE PLAN

Scale
0 2" 4" 8" 16"

ID.220.PS2.6.5

©2001 Gensler

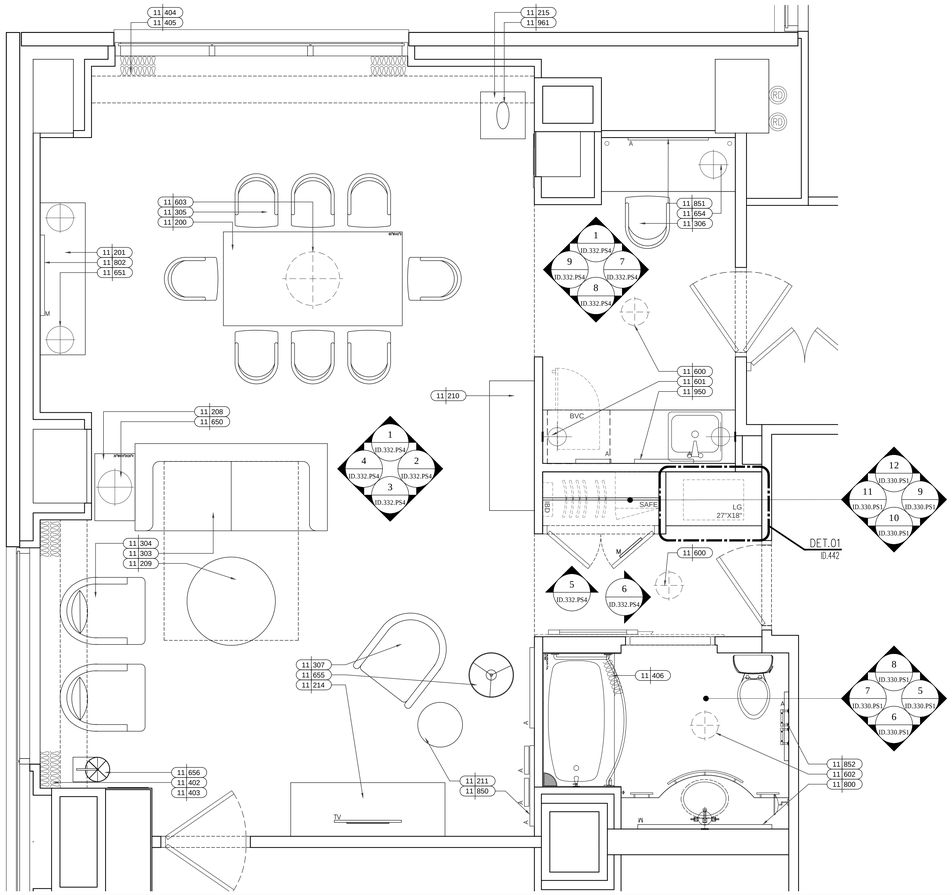

01 PARLOR S-4-FURNISHING PLAN
Scale: 1/2"=1'-0"

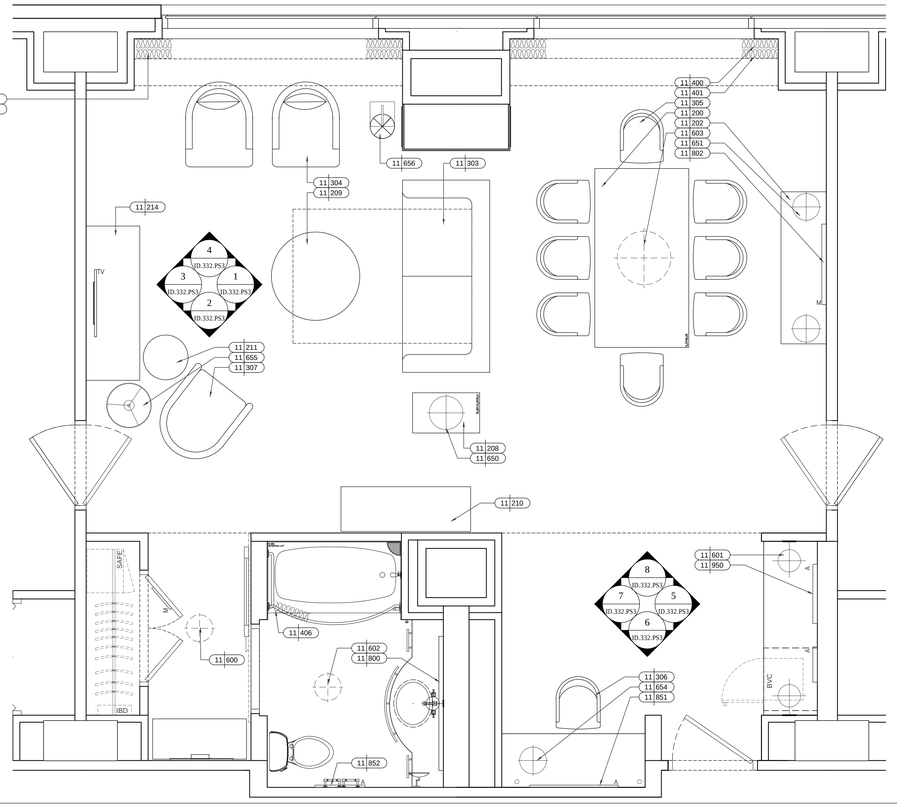

02 PARLOR S-3-FURNISHING PLAN
Scale: 1/2"=1'-0"

KEY NOTES

SHEET NOTES

HILTON AMERICAS CONVENTION CENTER HOTEL

OWNER:

HOUSTON CONVENTION CENTER HOTEL CORPORATION

Two Houston Center
909 Fannin, Suite 3210
Houston TX 77010
Telephone 713.437.6898
Facsimile 713.437.6938

DEVELOPMENT MANAGER:

INTERIOR ARCHITECT:

Wilson Associates
Interior Architectural Design

3811 Turtle Creek Blvd.
16th Floor Dallas, Texas
75219 Tel (214) 521-6753
Fax (214) 521-0207

Issue	Date & Issue Description	By	Check
-- --	-- -- / -- -- / -- --	-- --	-- --

Seal/Signature

REGISTERED INTERIOR DESIGNER
CONSTANCE H. JACKSON
1433
STATE OF TEXAS

10-18-2018

Project Name
HILTON AMERICAS CONVENTION CENTER HOTEL

Project Number
4993

CAD File Name
ID.220.PS3-4.DWG

Description
PARLOR S-3 & S4-FURNISHING PLAN

Scale
0 2" 4" 8" 16"

ID.220.PS3-4

©2001 Gensler

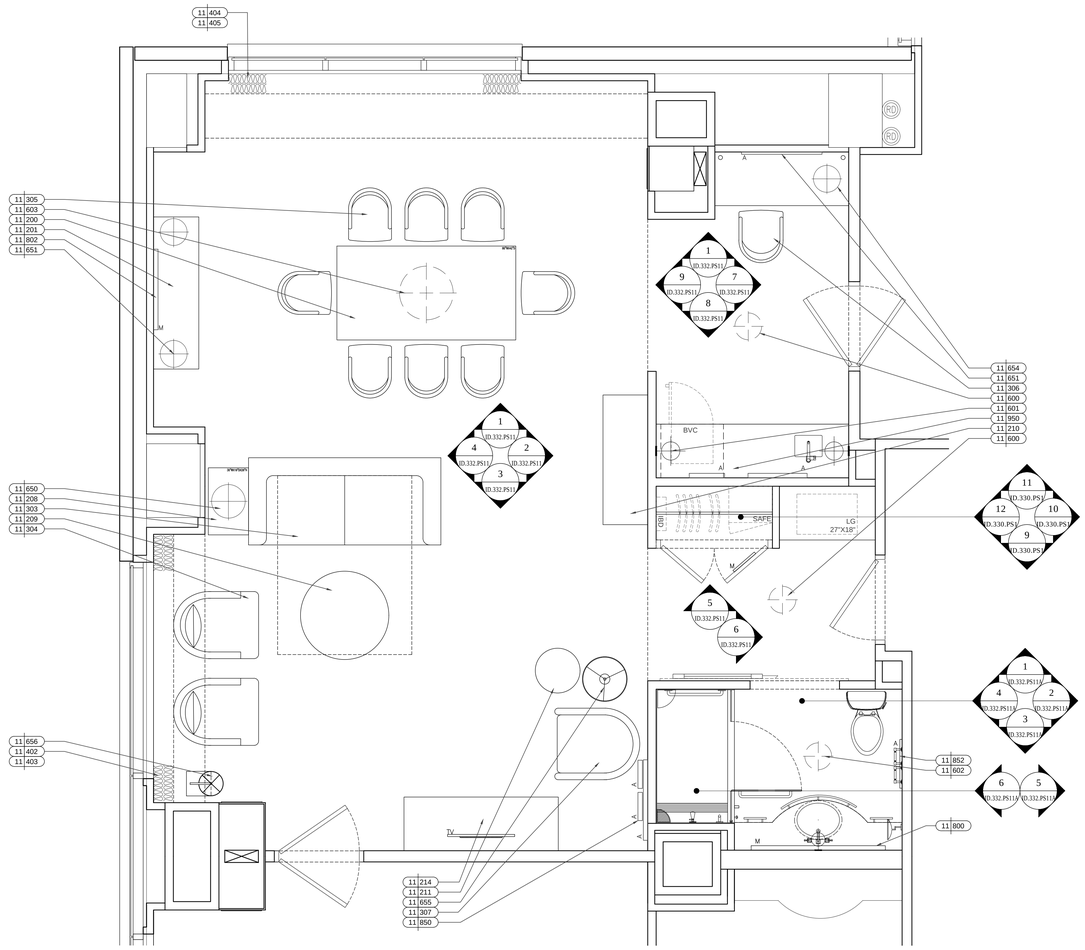

01 PARLOR S-11HC-FURNISHING PLAN
Scale: 1/2"=1'-0"

KEY NOTES

SHEET NOTES

HILTON AMERICAS CONVENTION CENTER HOTEL

OWNER:

HOUSTON CONVENTION CENTER HOTEL CORPORATION

Two Houston Center
909 Fannin, Suite 3210
Houston TX 77010
Telephone 713.437.6898
Facsimile 713.437.6938

DEVELOPMENT MANAGER:

INTERIOR ARCHITECT:

Wilson Associates
Interior Architectural Design

3811 Turtle Creek Blvd.
16th Floor Dallas, Texas
75219 Tel (214) 521-6753
Fax (214) 521-0207

Issue	Date & Issue Description	By	Check
-- --	-- -- / -- -- / -- --	-- --	-- --

Seal/Signature

REGISTERED INTERIOR DESIGNER CONSTANCE H. GAULKEN 1433 STATE OF TEXAS

Constance H. Gaulken

Project Name 10-18-2018

HILTON AMERICAS CONVENTION CENTER HOTEL

Project Number

4993

CAD File Name

ID.220.PS11.DWG

Description

ENLARGED GUESTROOM PLAN
PARLOR SUITE S11

Scale

0 2" 4" 8" 16"

ID.220.PS11

©2001 Gensler

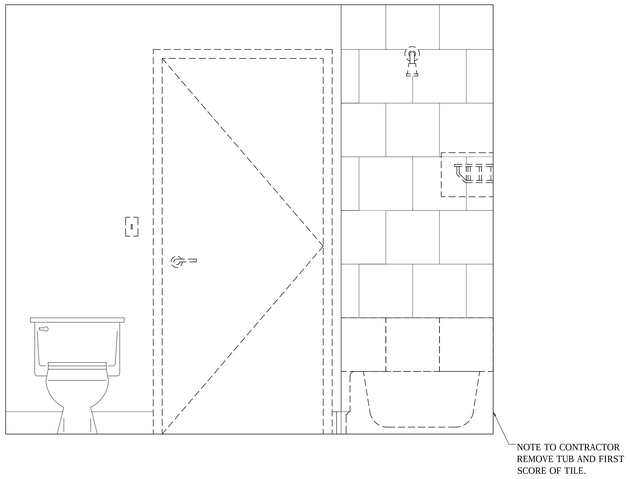

05 TYPICAL GUESTROOM BATHROOM DEMO ELEVATION
Scale: 1/2"=1'-0"

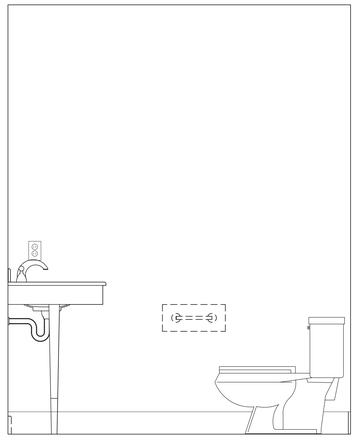

04 TYPICAL GUESTROOM BATHROOM DEMO ELEVATION
Scale: 1/2"=1'-0"

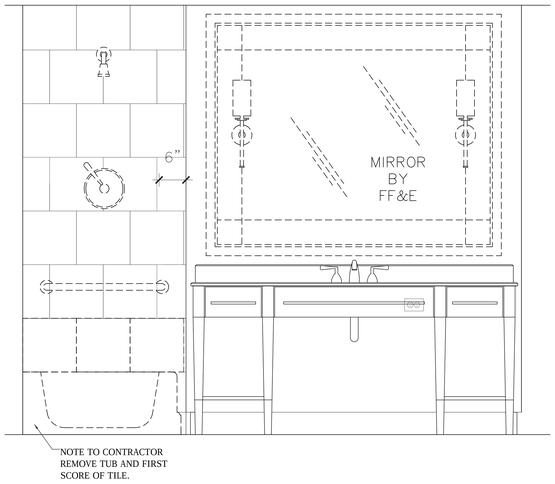

03 TYPICAL GUESTROOM BATHROOM DEMO ELEVATION
Scale: 1/2"=1'-0"

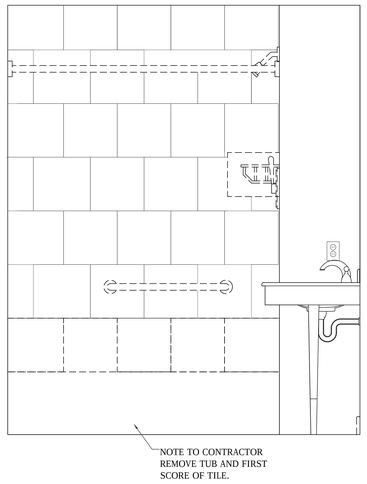

02 TYPICAL GUESTROOM BATHROOM DEMO ELEVATION
Scale: 1/2"=1'-0"

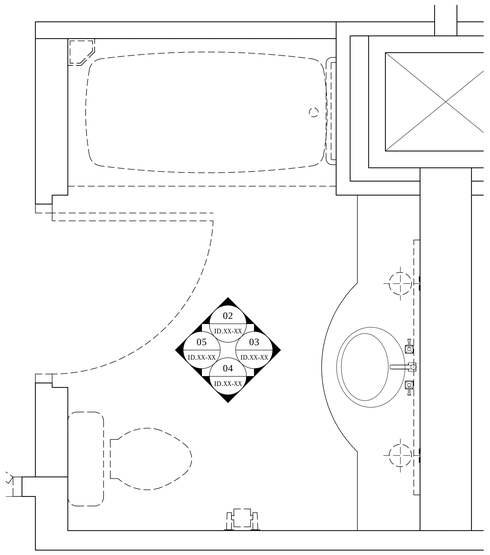

01 TYPICAL GUESTROOM BATHROOM DEMO PLAN
Scale: 1/2"=1'-0"

KEY NOTES

SHEET NOTES

HILTON AMERICAS CONVENTION CENTER HOTEL

OWNER:

HOUSTON CONVENTION CENTER HOTEL CORPORATION

Two Houston Center
909 Fannin, Suite 3210
Houston TX 77010
Telephone 713.437.6898
Facsimile 713.437.6938

DEVELOPMENT MANAGER:

INTERIOR ARCHITECT:

Wilson Associates
Interior Architectural Design

3811 Turtle Creek Blvd.
16th Floor Dallas, Texas
75219 Tel (214) 521-6753
Fax (214) 521-0207

Issue	Date & Issue Description	By	Check
--	-- /-- /--	--	--

Seal/Signature

REGISTERED INTERIOR DESIGNER
CONSTANCE H. JACKSON
1433
STATE OF TEXAS

Constance H. Jackson
10-18-2018

Project Name
HILTON AMERICAS CONVENTION CENTER HOTEL

Project Number
4993

CAD File Name
ID.220.TYP.DWG

Description
TYPICAL GUESTROOM BATHROM PLAN AND ELEVATIONS

Scale
0 2" 4" 8" 16"

ID.220.TYP

©2001 Gensler

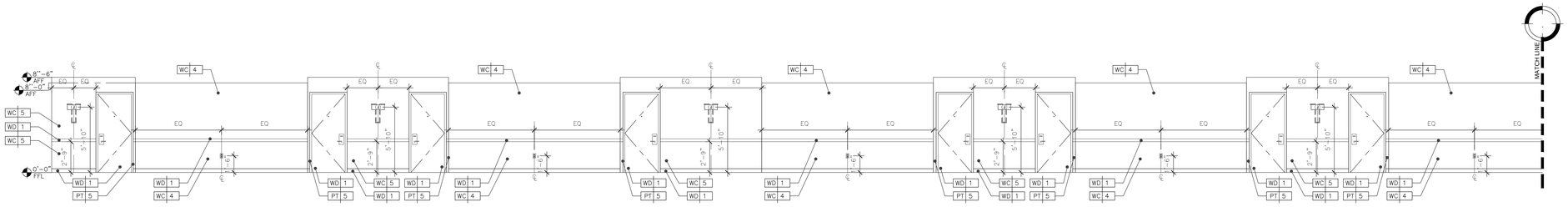

1 CORRIDOR ELEVATION
Scale: 1/4"=1'-0"

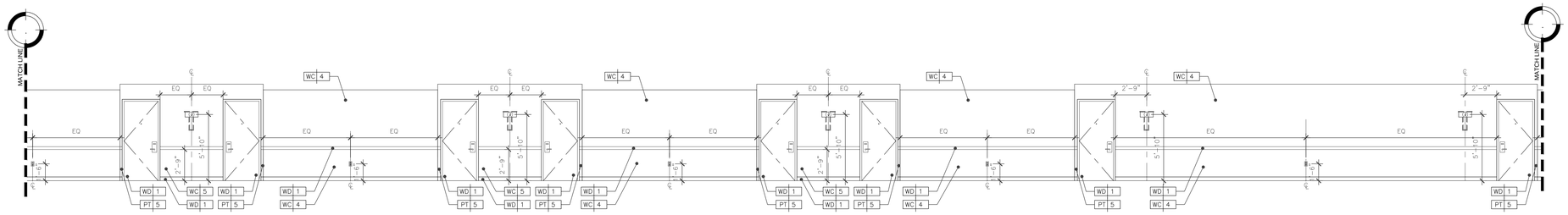

– CORRIDOR ELEVATION CONTINUE
Scale: 1/4"=1'-0"

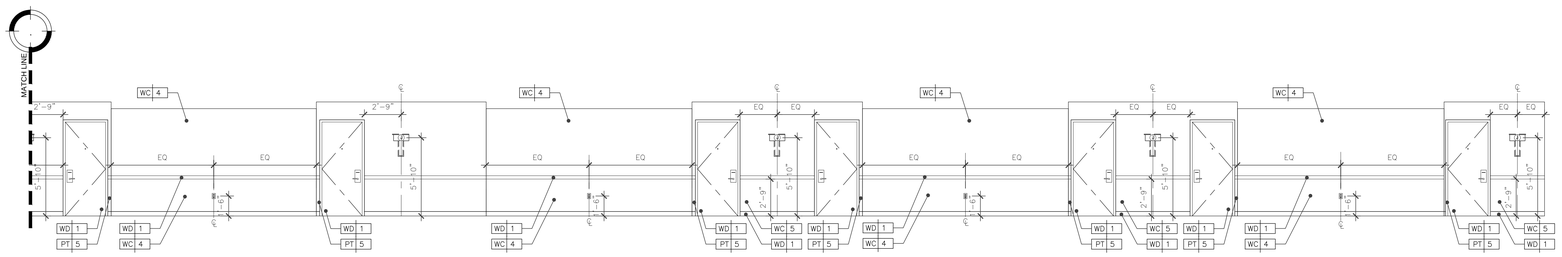

– CORRIDOR ELEVATION CONTINUE
Scale: 1/4"=1'-0"

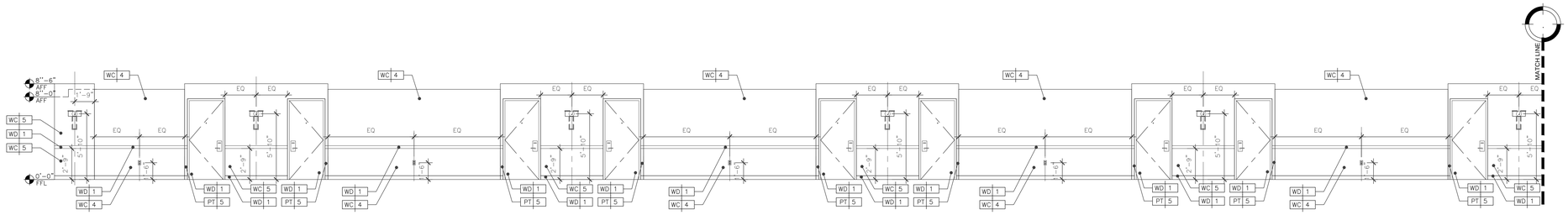

2 CORRIDOR ELEVATION
Scale: 1/4"=1'-0"

KEY NOTES

SHEET NOTES

HILTON AMERICAS CONVENTION CENTER HOTEL

OWNER:

HOUSTON CONVENTION CENTER HOTEL CORPORATION

Two Houston Center
909 Fannin, Suite 3210
Houston TX 77010
Telephone 713.437.6898
Facsimile 713.437.6938

DEVELOPMENT MANAGER:

INTERIOR ARCHITECT:

Wilson Associates
Interior Architectural Design

3811 Turtle Creek Blvd.
16th Floor Dallas, Texas
75219 Tel (214) 521-6753
Fax (214) 521-0207

Issue	Date & Issue Description	By	Check
-- --	-- -- / -- -- / -- --	-- --	-- --

Seal/Signature

REGISTERED INTERIOR DESIGNER
CONSTANCE H. JACKSON
1433
STATE OF TEXAS

Constance H. Jackson
10-18-2018

Project Name
HILTON AMERICAS CONVENTION CENTER HOTEL

Project Number
4993

CAD File Name
ID.300.TC8-17.DWG

Description
TYPICAL CORRIDOR – LEVELS 8 – 17 – ELEVATIONS

Scale
0 2" 4" 8" 16"

ID.300.TC8-17

©2001 Gensler

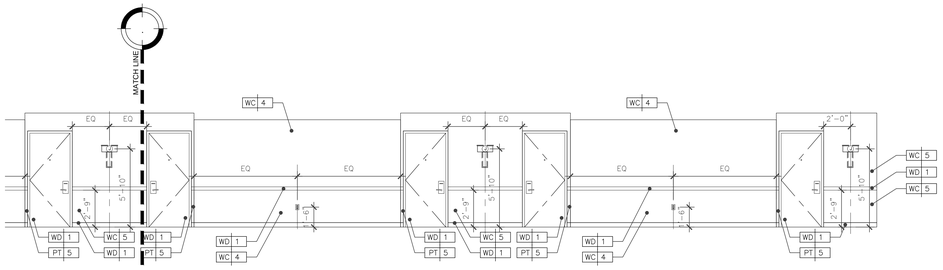

1 CORRIDOR ELEVATION
Scale: 1/4"=1'-0"

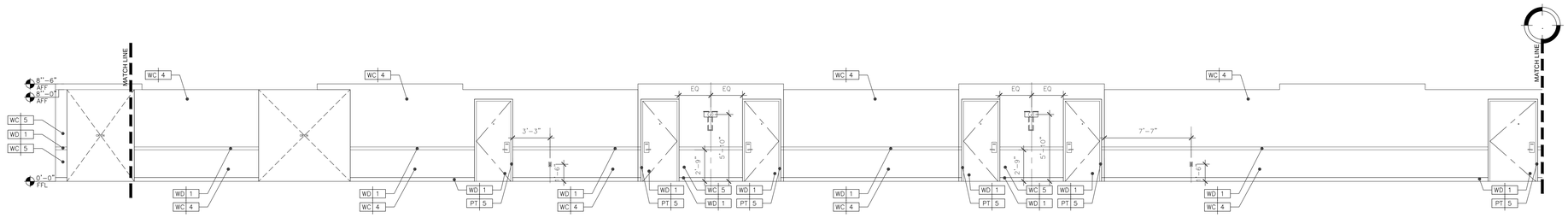

3 CORRIDOR ELEVATION CONTINUE
Scale: 1/4"=1'-0"

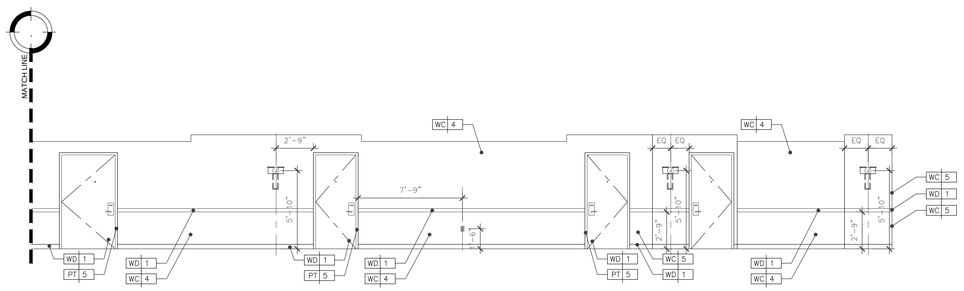

– CORRIDOR ELEVATION CONTINUE
Scale: 1/4"=1'-0"

KEY NOTES

SHEET NOTES

HILTON AMERICAS CONVENTION CENTER HOTEL

OWNER:

HOUSTON CONVENTION CENTER HOTEL CORPORATION

Two Houston Center
909 Fannin, Suite 3210
Houston TX 77010
Telephone 713.437.6898
Facsimile 713.437.6938

DEVELOPMENT MANAGER:

INTERIOR ARCHITECT:

Wilson Associates
Interior Architectural Design

3811 Turtle Creek Blvd.
16th Floor Dallas, Texas
75219 Tel (214) 521-6753
Fax (214) 521-0207

Issue	Date & Issue Description	By	Check
-- --	-- -- / -- -- / -- --	-- --	-- --

Seal/Signature

REGISTERED INTERIOR DESIGNER
CONSTANCE H. GAULKSON
1433
STATE OF TEXAS

10-18-2018

Project Name

HILTON AMERICAS CONVENTION CENTER HOTEL

Project Number

4993

CAD File Name

ID.300.TC8-17.DWG

Description

TYPICAL CORRIDOR – LEVELS 8 – 17 – ELEVATIONS

Scale

0 2" 4" 8" 16"

ID.300A.TC8-17

©2001 Gensler

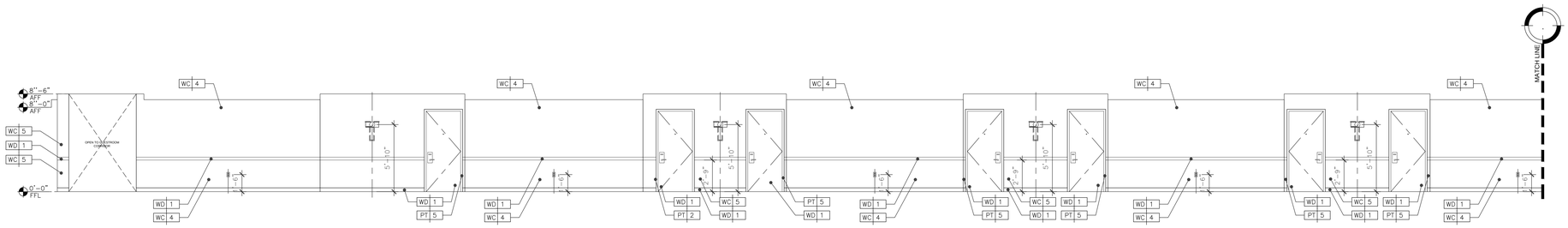

1 CORRIDOR ELEVATION
Scale: 1/4"=1'-0"

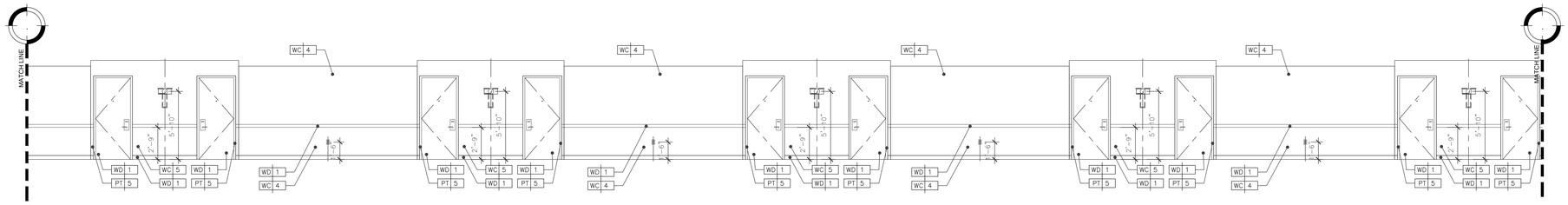

– CORRIDOR ELEVATION CONTINUE
Scale: 1/4"=1'-0"

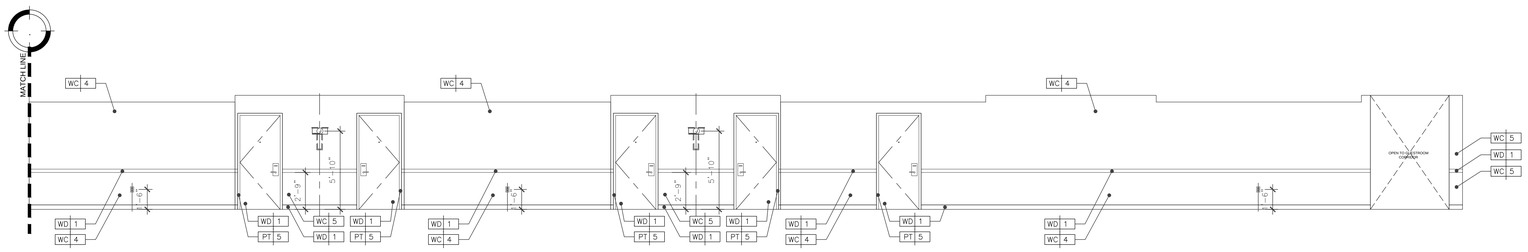

– CORRIDOR ELEVATION CONTINUE
Scale: 1/4"=1'-0"

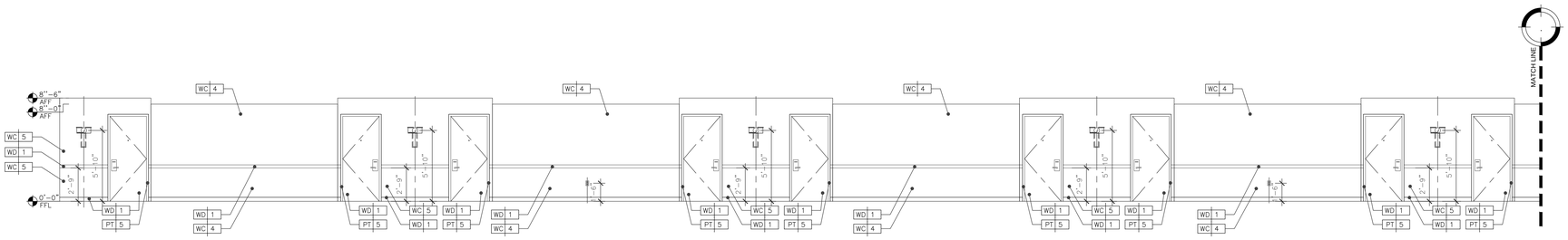

2 CORRIDOR ELEVATION
Scale: 1/4"=1'-0"

KEY NOTES

SHEET NOTES

HILTON AMERICAS CONVENTION CENTER HOTEL

OWNER:

HOUSTON CONVENTION CENTER HOTEL CORPORATION

Two Houston Center
909 Fannin, Suite 3210
Houston TX 77010
Telephone 713.437.6898
Facsimile 713.437.6938

DEVELOPMENT MANAGER:

INTERIOR ARCHITECT:

Wilson Associates
Interior Architectural Design

3811 Turtle Creek Blvd.
16th Floor Dallas, Texas
75219 Tel (214) 521-6753
Fax (214) 521-0207

Issue	Date & Issue Description	By	Check
-- --	-- -- / -- -- / -- --	-- --	-- --

Seal/Signature

REGISTERED INTERIOR DESIGNER
LORRAINE H. JACKSON
1433
STATE OF TEXAS

Lorraine H. Jackson

Project Name 10-18-2018

HILTON AMERICAS CONVENTION CENTER HOTEL

Project Number

4993

CAD File Name

ID.300.TC8-17.DWG

Description

TYPICAL CORRIOR – LEVELS 8 – 17 – ELEVATIONS

Scale

0 2" 4" 8" 16"

ID.301B.TC8-17

©2001 Gensler

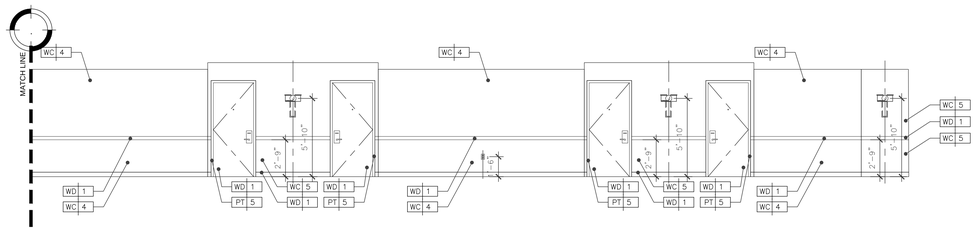

CORRIDOR ELEVATION
Scale: 1/4"=1'-0"

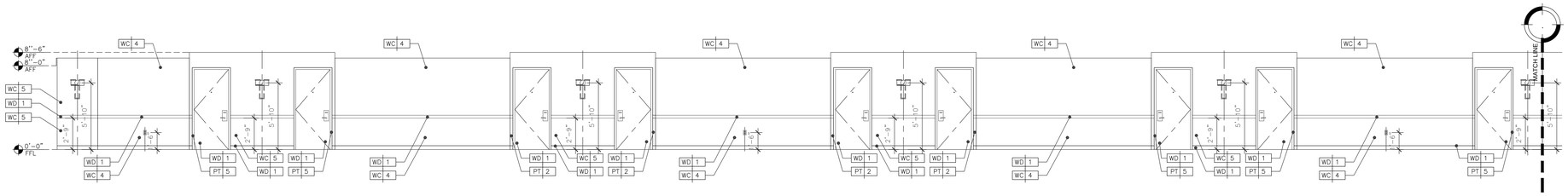

3 CORRIDOR ELEVATION CONTINUE
Scale: 1/4"=1'-0"

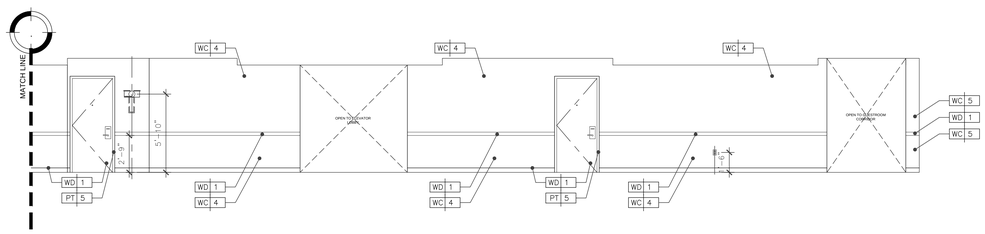

CORRIDOR ELEVATION CONTINUE
Scale: 1/4"=1'-0"

KEY NOTES

SHEET NOTES

HILTON AMERICAS CONVENTION CENTER HOTEL

OWNER:

HOUSTON CONVENTION CENTER HOTEL CORPORATION

Two Houston Center
909 Fannin, Suite 3210
Houston TX 77010
Telephone 713.437.6898
Facsimile 713.437.6938

DEVELOPMENT MANAGER:

INTERIOR ARCHITECT:

Wilson Associates
Interior Architectural Design

3811 Turtle Creek Blvd.
16th Floor Dallas, Texas
75219 Tel (214) 521-6753
Fax (214) 521-0207

Issue	Date & Issue Description	By	Check
-- --	-- -- / -- -- / -- --	-- --	-- --

Seal/Signature

REGISTERED INTERIOR DESIGNER
CONSTANCE H. JACKSON
1433
STATE OF TEXAS

Constance H. Jackson

10-18-2018

Project Name

HILTON AMERICAS
CONVENTION CENTER HOTEL

Project Number

4993

CAD File Name

ID.300.TC8-17.DWG

Description

TYPICAL CORRIOR - LEVELS 8 - 17 - ELEVATIONS

Scale

0 2" 4" 8" 16"

ID.301C.TC8-17

©2001 Gensler

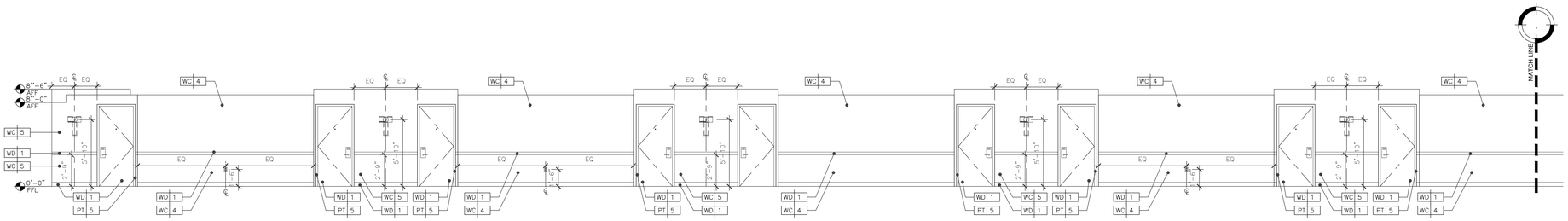

1 CORRIDOR ELEVATION
Scale: 1/4"=1'-0"

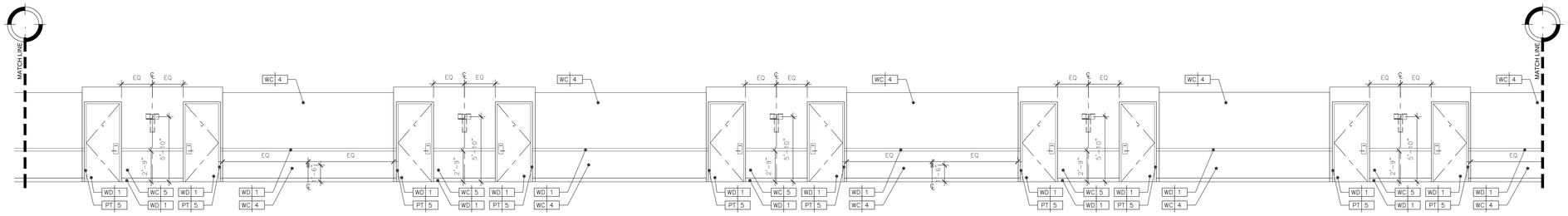

– CORRIDOR ELEVATION CONTINUE
Scale: 1/4"=1'-0"

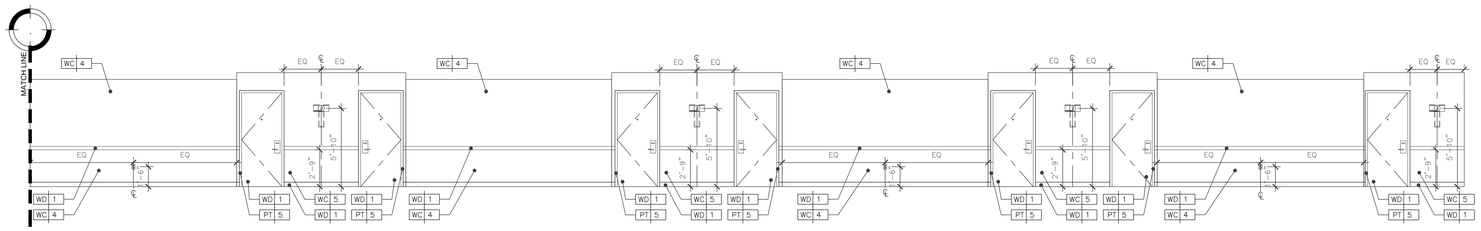

– CORRIDOR ELEVATION CONTINUE
Scale: 1/4"=1'-0"

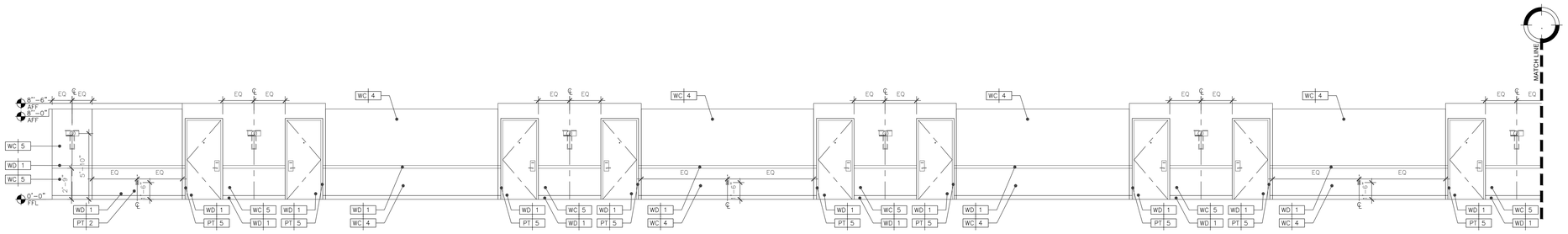

2 CORRIDOR ELEVATION
Scale: 1/4"=1'-0"

KEY NOTES

SHEET NOTES

HILTON AMERICAS CONVENTION CENTER HOTEL

OWNER:

HOUSTON CONVENTION CENTER HOTEL CORPORATION

DEVELOPMENT MANAGER:

Two Houston Center
909 Fannin, Suite 3210
Houston TX 77010
Telephone 713.437.6898
Facsimile 713.437.6938

INTERIOR ARCHITECT:

Wilson Associates
Interior Architectural Design

3811 Turtle Creek Blvd.
16th Floor Dallas, Texas
75219 Tel (214) 521-6753
Fax (214) 521-0207

Issue	Date & Issue Description	By	Check
--	-- -- / -- -- / -- --	--	--

Seal/Signature

REGISTERED INTERIOR DESIGNER
CONSTANCE H. JACKSON
1433
STATE OF TEXAS

Project Name 10-18-2018

HILTON AMERICAS CONVENTION CENTER HOTEL

Project Number

4993

CAD File Name

ID.302.C6-7.DWG

Description

CORRIDOR LEVELS 6-7 KEY ELEVATIONS

Scale

0 2" 4" 8" 16"

ID.302.C6-7

©2001 Gensler

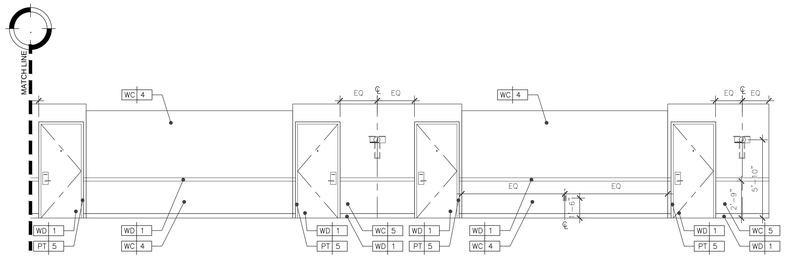

CORRIDOR ELEVATION CONTINUE
Scale: 1/4"=1'-0"

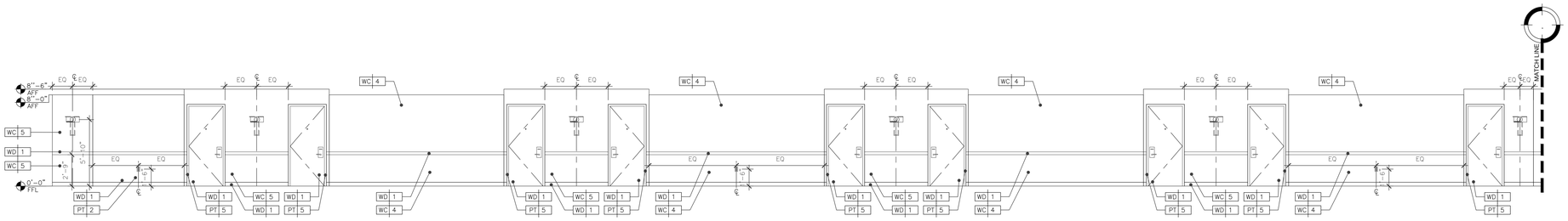

3 CORRIDOR ELEVATION
Scale: 1/4"=1'-0"

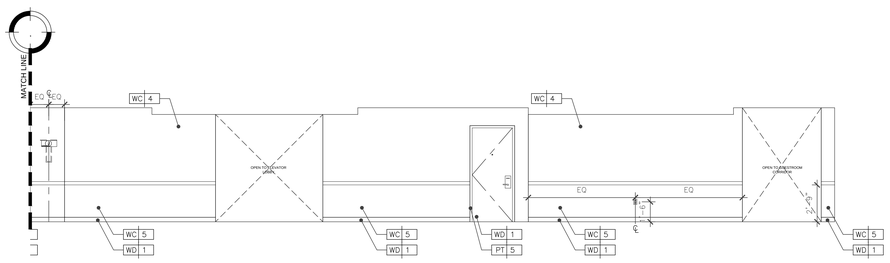

CORRIDOR ELEVATION CONTINUE
Scale: 1/4"=1'-0"

KEY NOTES

SHEET NOTES

HILTON AMERICAS CONVENTION CENTER HOTEL

OWNER:

HOUSTON CONVENTION CENTER HOTEL CORPORATION

Two Houston Center
909 Fannin, Suite 3210
Houston TX 77010
Telephone 713.437.6898
Facsimile 713.437.6938

DEVELOPMENT MANAGER:

INTERIOR ARCHITECT:

Wilson Associates
Interior Architectural Design

3811 Turtle Creek Blvd.
16th Floor Dallas, Texas
75219 Tel (214) 521-6753
Fax (214) 521-0207

Issue	Date & Issue Description	By	Check
-- --	-- -- / -- -- / -- --	-- --	-- --

Seal/Signature

REGISTERED INTERIOR DESIGNER CONSTANCE H. JACKSON 1433 STATE OF TEXAS

10-18-2018

Project Name

HILTON AMERICAS CONVENTION CENTER HOTEL

Project Number

4993

CAD File Name

ID.302.C6-7.DWG

Description

CORRIDOR LEVELS 6-7 KEY ELEVATIONS

Scale

0 2" 4" 8" 16"

ID.302A.C6-7

©2001 Gensler

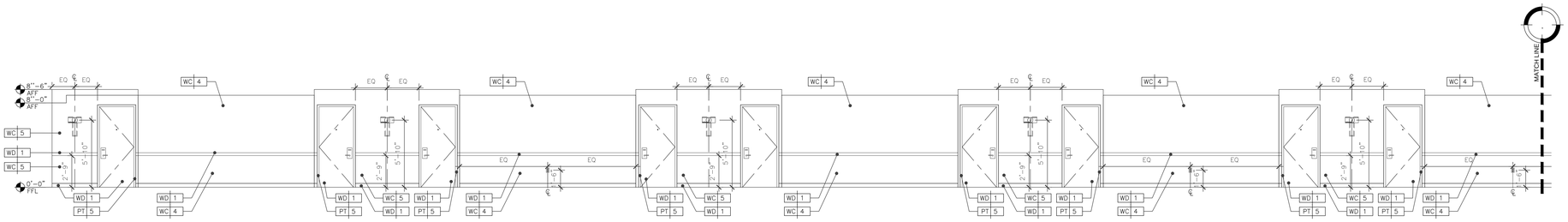

1 CORRIDOR ELEVATION
Scale: 1/4"=1'-0"

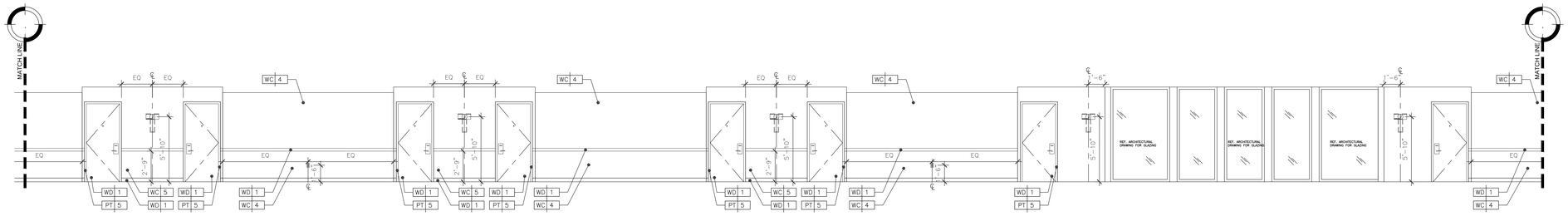

– CORRIDOR ELEVATION CONTINUE
Scale: 1/4"=1'-0"

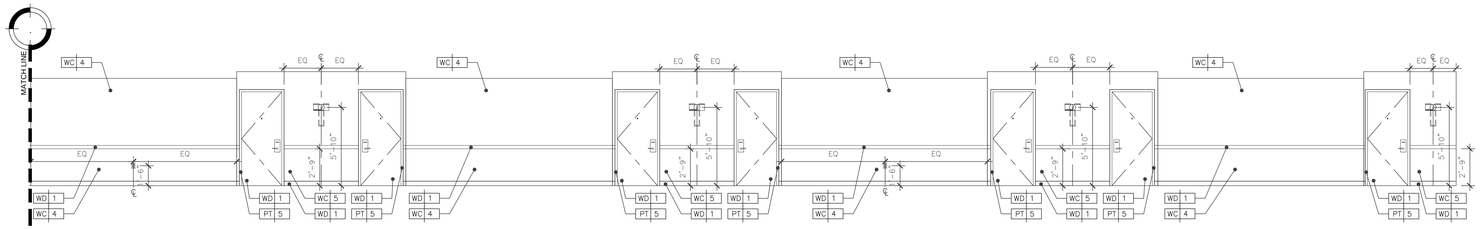

– CORRIDOR ELEVATION CONTINUE
Scale: 1/4"=1'-0"

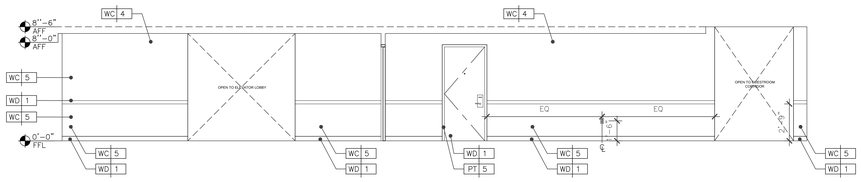

2 CORRIDOR ELEVATION
Scale: 1/4"=1'-0"

KEY NOTES

SHEET NOTES

HILTON AMERICAS CONVENTION CENTER HOTEL

OWNER:

HOUSTON CONVENTION CENTER HOTEL CORPORATION

Two Houston Center
909 Fannin, Suite 3210
Houston TX 77010
Telephone 713.437.6898
Facsimile 713.437.6938

DEVELOPMENT MANAGER:

INTERIOR ARCHITECT:

Wilson Associates
Interior Architectural Design

3811 Turtle Creek Blvd.
16th Floor Dallas, Texas
75219 Tel (214) 521-6753
Fax (214) 521-0207

Issue	Date & Issue Description	By	Check
--	-- / -- / --	--	--

Seal/Signature

REGISTERED INTERIOR DESIGNER
CONSTANCE H. JACKSON
1433
STATE OF TEXAS

10-18-2018

Project Name
HILTON AMERICAS CONVENTION CENTER HOTEL

Project Number
4993

CAD File Name
ID.303.C18-19.DWG

Description
CORRIDOR LEVELS 18-19 KEY ELEVATIONS

Scale
0 2" 4" 8" 16"

ID.303.C18-19

©2001 Gensler

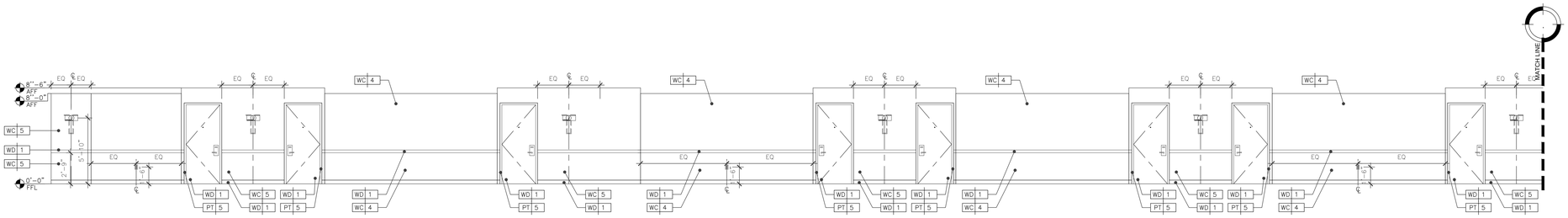

1 CORRIDOR ELEVATION
Scale: 1/4"=1'-0"

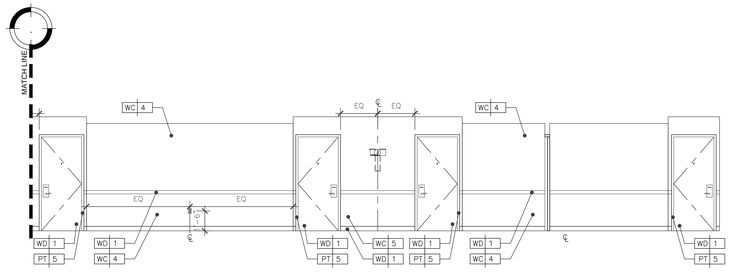

– CORRIDOR ELEVATION CONTINUE
Scale: 1/4"=1'-0"

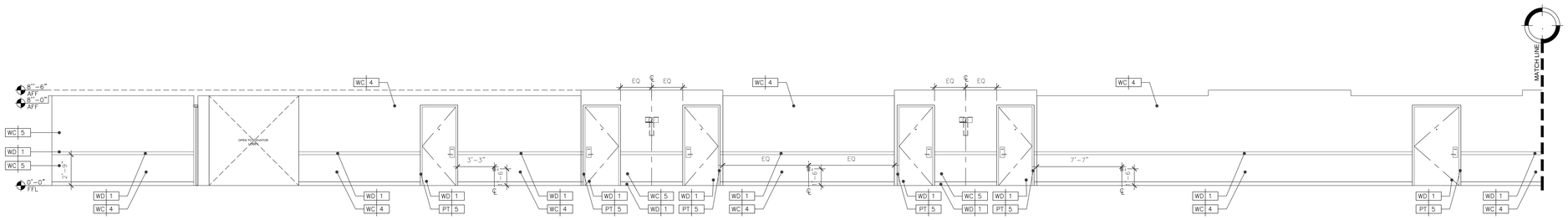

2 CORRIDOR ELEVATION
Scale: 1/4"=1'-0"

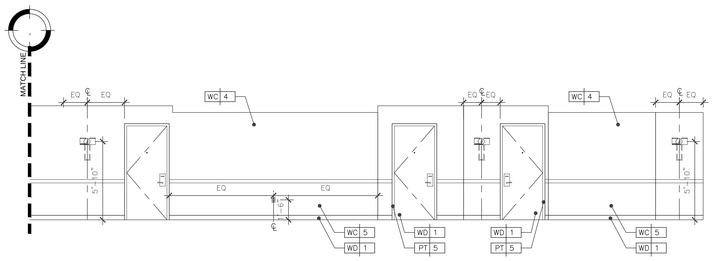

– CORRIDOR ELEVATION CONTINUE
Scale: 1/4"=1'-0"

KEY NOTES

SHEET NOTES

HILTON AMERICAS CONVENTION CENTER HOTEL

OWNER:

HOUSTON CONVENTION CENTER HOTEL CORPORATION

Two Houston Center
909 Fannin, Suite 3210
Houston TX 77010
Telephone 713.437.6898
Facsimile 713.437.6938

DEVELOPMENT MANAGER:

INTERIOR ARCHITECT:

Wilson Associates
Interior Architectural Design

3811 Turtle Creek Blvd.
16th Floor Dallas, Texas
75219 Tel (214) 521-6753
Fax (214) 521-0207

Issue	Date & Issue Description	By	Check
--	-- / -- / --	--	--

Seal/Signature

REGISTERED INTERIOR DESIGNER
CONSTANCE H. JACKSON
1433
STATE OF TEXAS

10-18-2018

Project Name
HILTON AMERICAS CONVENTION CENTER HOTEL

Project Number
4993

CAD File Name
ID.304.C19-22.DWG

Description
CORRIDOR LEVELS 19-22 KEY ELEVATIONS

Scale
0 2" 4" 8" 16"

ID.304.C19-22

©2001 Gensler

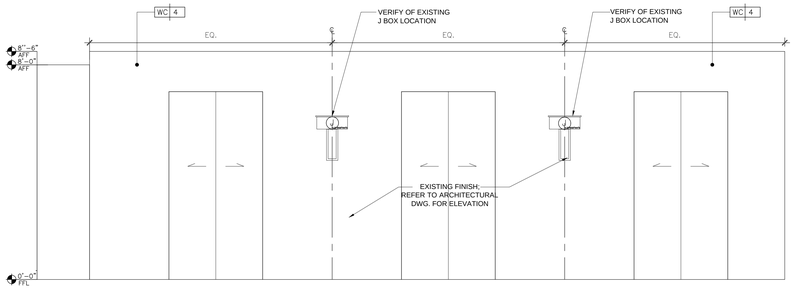

1 ELEVATOR LOBBY ELEVATION
Scale: 1/2"=1'-0"

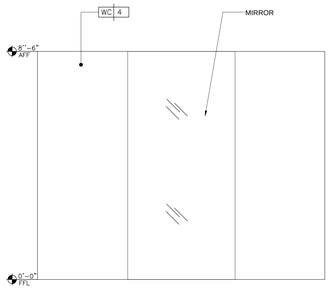

2 ELEVATOR LOBBY ELEVATION
Scale: 1/2"=1'-0"

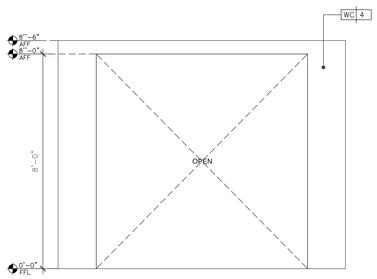

3 ELEVATOR LOBBY ELEVATION
Scale: 1/2"=1'-0"

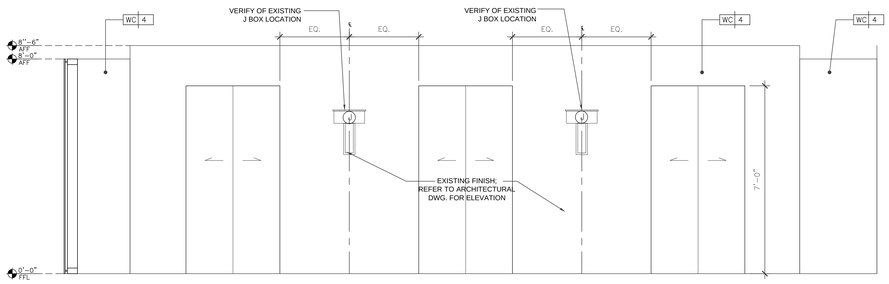

04 ELEVATOR LOBBY ELEVATION
Scale: 1/2"=1'-0"

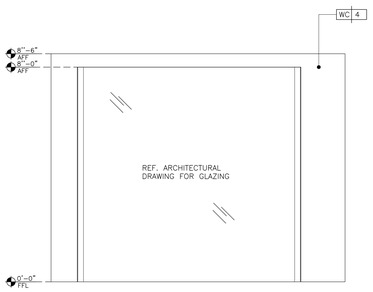

5 ELEVATOR LOBBY ELEVATION
Scale: 1/2"=1'-0"

KEY NOTES

SHEET NOTES

HILTON AMERICAS CONVENTION CENTER HOTEL

OWNER:

HOUSTON CONVENTION CENTER HOTEL CORPORATION

Two Houston Center
909 Fannin, Suite 3210
Houston TX 77010
Telephone 713.437.6898
Facsimile 713.437.6938

DEVELOPMENT MANAGER:

INTERIOR ARCHITECT:

Wilson Associates
Interior Architectural Design

3811 Turtle Creek Blvd.
16th Floor Dallas, Texas
75219 Tel (214) 521-6753
Fax (214) 521-0207

Issue	Date & Issue Description	By	Check
-- --	-- -- / -- -- / -- --	-- --	-- --

Seal/Signature

REGISTERED INTERIOR DESIGNER
CONSTANCE H. JACKSON
1433
STATE OF TEXAS

Constance H. Jackson 10-18-2018

Project Name

HILTON AMERICAS CONVENTION CENTER HOTEL

Project Number

4993

CAD File Name

ID.310.EL.DWG

Description

ELEVATOR LOBBY UPPER & LOWER LEVEL-ELEVATIONS

Scale

0 2" 4" 8" 16"

ID.310.EL

©2001 Gensler

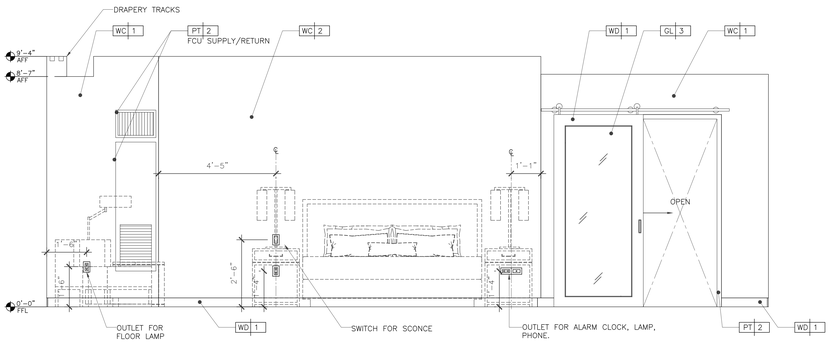

1 KING BEDROOM ELEVATION
Scale: 1/2"=1'-0"

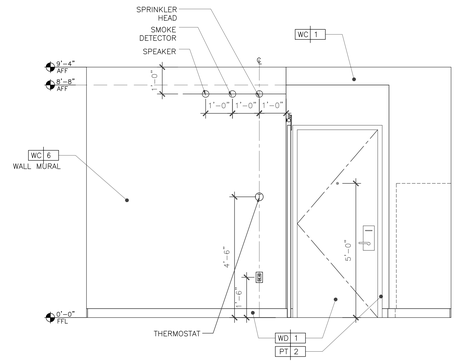

2 KING BEDROOM ELEVATION
Scale: 1/2"=1'-0"

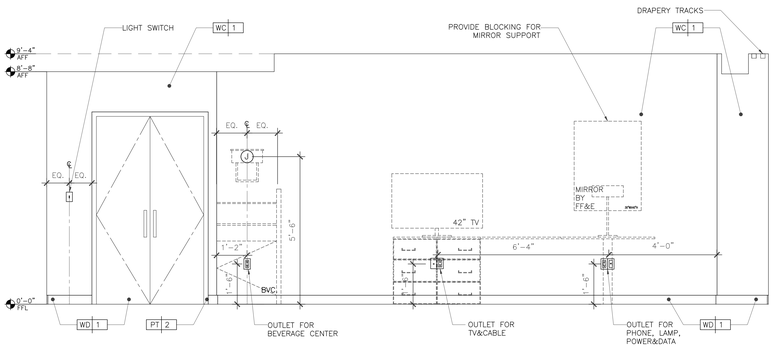

3 KING BEDROOM ELEVATION
Scale: 1/2"=1'-0"

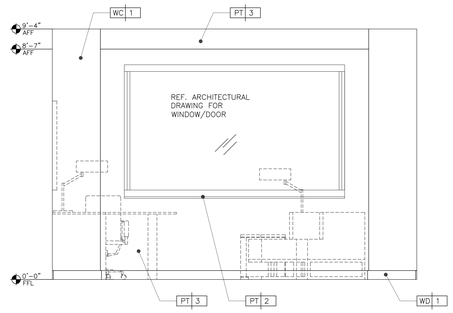

4 KING BEDROOM ELEVATION
Scale: 1/2"=1'-0"

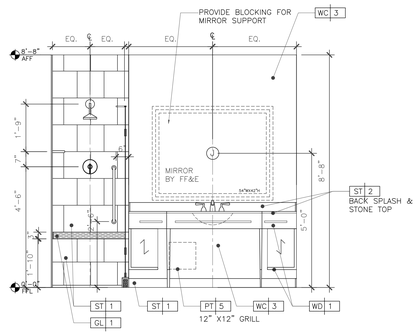

5 KING BATHROOM ELEVATION
Scale: 1/2"=1'-0"

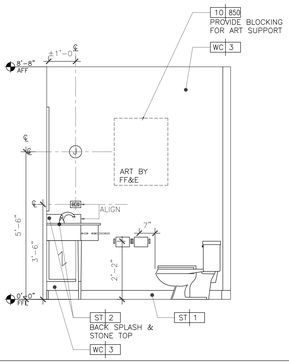

6 KING BATHROOM ELEVATION
Scale: 1/2"=1'-0"

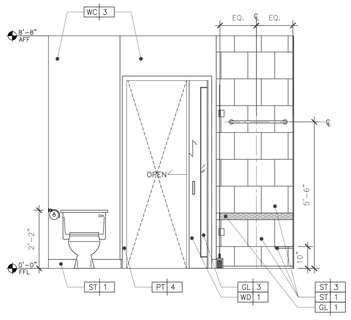

7 KING BATHROOM ELEVATION
Scale: 1/2"=1'-0"

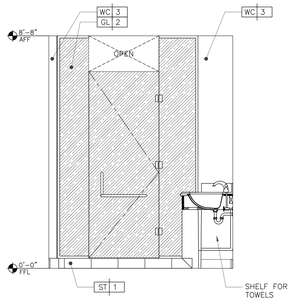

8 KING BATHROOM ELEVATION
Scale: 1/2"=1'-0"

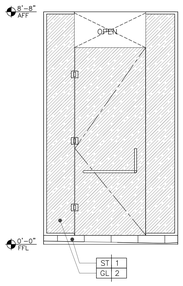

9 KING SHOWER ELEVATION
Scale: 1/2"=1'-0"

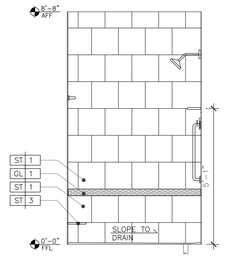

10 KING SHOWER ELEVATION
Scale: 1/2"=1'-0"

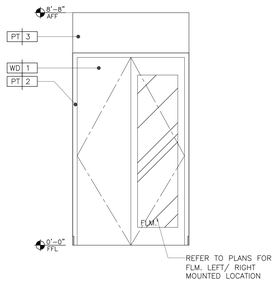

11 CLOSET ELEVATION
Scale: 1/2"=1'-0"

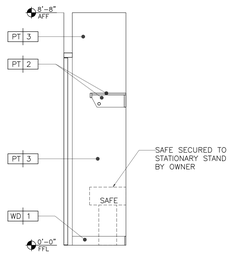

12 CLOSET ELEVATION
Scale: 1/2"=1'-0"

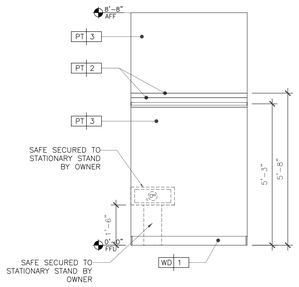

13 CLOSET ELEVATION
Scale: 1/2"=1'-0"

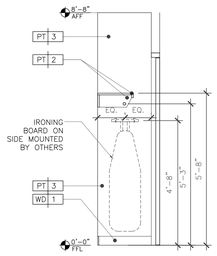

14 CLOSET ELEVATION
Scale: 1/2"=1'-0"

KEY NOTES

SHEET NOTES

HILTON AMERICAS CONVENTION CENTER HOTEL

OWNER:

HOUSTON CONVENTION CENTER HOTEL CORPORATION

Two Houston Center
909 Fannin, Suite 3210
Houston TX 77010
Telephone 713.437.6898
Facsimile 713.437.6938

DEVELOPMENT MANAGER:

INTERIOR ARCHITECT:

Wilson Associates
Interior Architectural Design

3811 Turtle Creek Blvd.
16th Floor Dallas, Texas
75219 Tel (214) 521-6753
Fax (214) 521-0207

Issue	Date & Issue Description	By	Check
--	-- / -- / --	--	--

Seal/Signature

REGISTERED INTERIOR DESIGNER CONSTANCE H. JACKSON 1433 STATE OF TEXAS

Constance H. Jackson 10-18-2018

Project Name
HILTON AMERICAS CONVENTION CENTER HOTEL

Project Number
4993

CAD File Name
ID.320.K1.DWG

Description
GUESTROOM K-1 - ELEVATIONS

Scale
0 2" 4" 8" 16"

ID.320.K1

©2001 Gensler

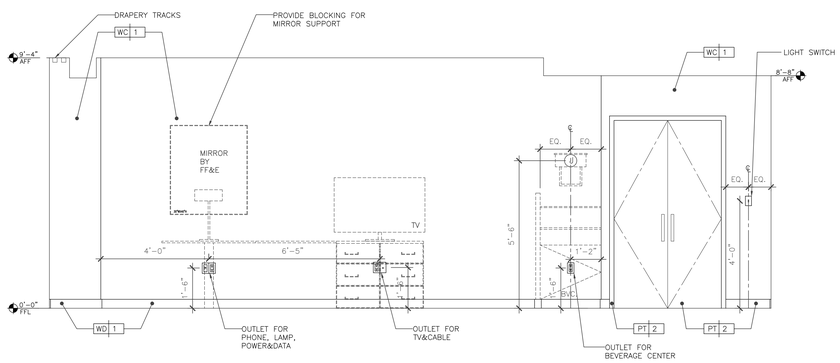

1 DQ-1 BEDROOM ELEVATION
Scale: 1/2"=1'-0"

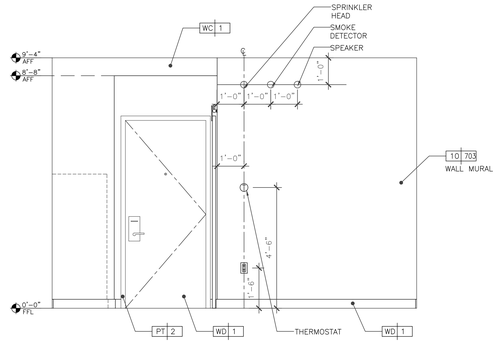

2 DQ-1 BEDROOM ELEVATION
Scale: 1/2"=1'-0"

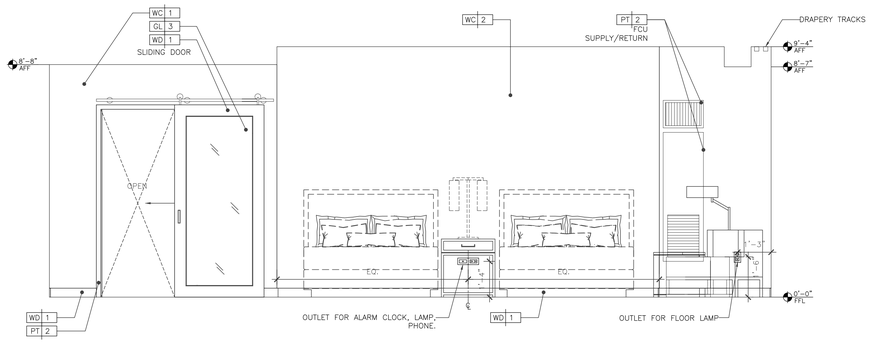

3 DQ-1 BEDROOM ELEVATION
Scale: 1/2"=1'-0"

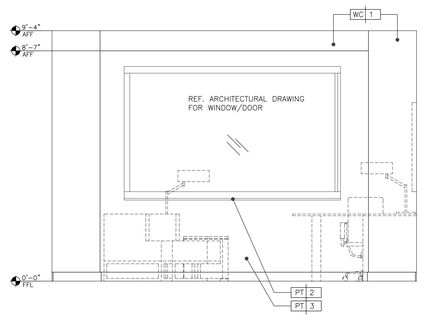

4 DQ-1 BEDROOM ELEVATION
Scale: 1/2"=1'-0"

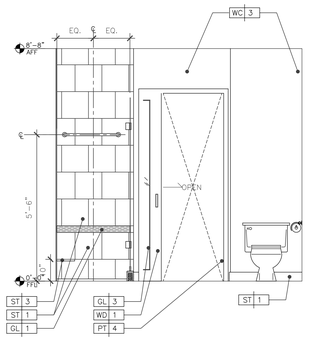

5 DQ-1 BATHROOM ELEVATION
Scale: 1/2"=1'-0"

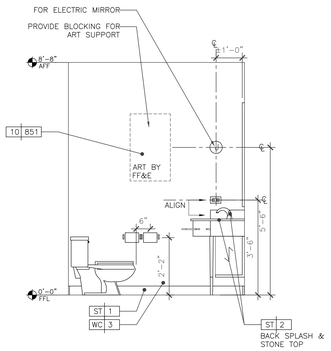

6 DQ-1 BATHROOM ELEVATION
Scale: 1/2"=1'-0"

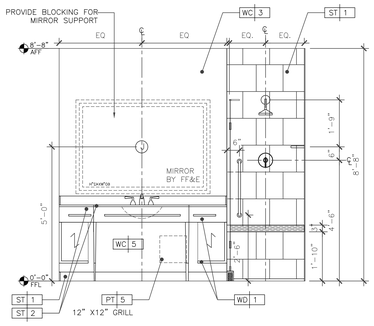

7 DQ-1 BATHROOM ELEVATION
Scale: 1/2"=1'-0"

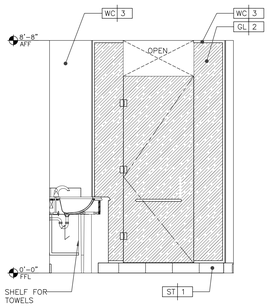

8 DQ-1 BATHROOM ELEVATION
Scale: 1/2"=1'-0"

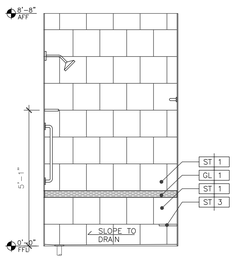

9 DQ-1 SHOWER ELEVATION
Scale: 1/2"=1'-0"

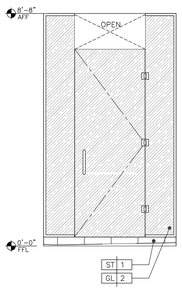

10 DQ-1 SHOWER ELEVATION
Scale: 1/2"=1'-0"

KEY NOTES

SHEET NOTES

HILTON AMERICAS CONVENTION CENTER HOTEL

OWNER:

HOUSTON CONVENTION CENTER HOTEL CORPORATION

Two Houston Center
909 Fannin, Suite 3210
Houston TX 77010
Telephone 713.437.6898
Facsimile 713.437.6938

DEVELOPMENT MANAGER:

INTERIOR ARCHITECT:

Wilson Associates
Interior Architectural Design

3811 Turtle Creek Blvd.
16th Floor Dallas, Texas
75219 Tel (214) 521-6753
Fax (214) 521-0207

Issue	Date & Issue Description	By	Check
--	-- -- / -- --	--	--

Seal/Signature

REGISTERED INTERIOR DESIGNER CONSTANCE H. JACKSON 1433 STATE OF TEXAS

Constance H. Jackson

10-18-2018

Project Name

HILTON AMERICAS CONVENTION CENTER HOTEL

Project Number

4993

CAD File Name

ID.321.DQ1-2 ELEVATION.DWG

Description

GUESTROOM DQ-1 ELEVATIONS

Scale

0 2" 4" 8" 16"

ID.321.DQ-1-2

©2001 Gensler

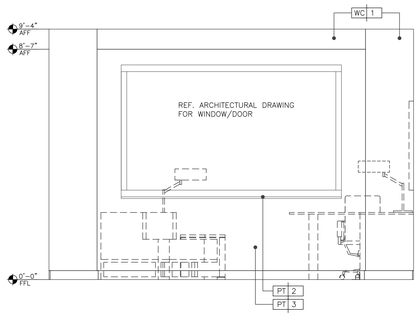

1 DQ-2 BEDROOM ELEVATION
Scale: 1/2"=1'-0"

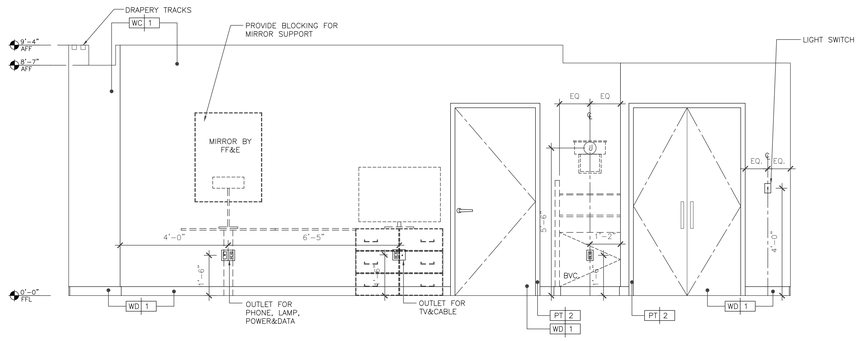

2 DQ-2 BEDROOM ELEVATION
Scale: 1/2"=1'-0"

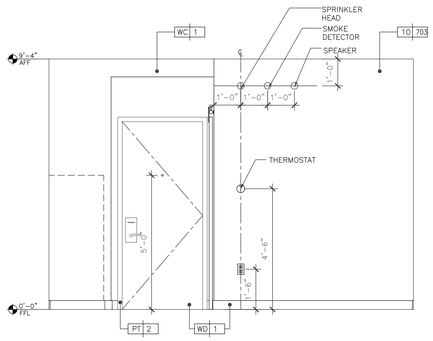

3 DQ-2 BEDROOM ELEVATION
Scale: 1/2"=1'-0"

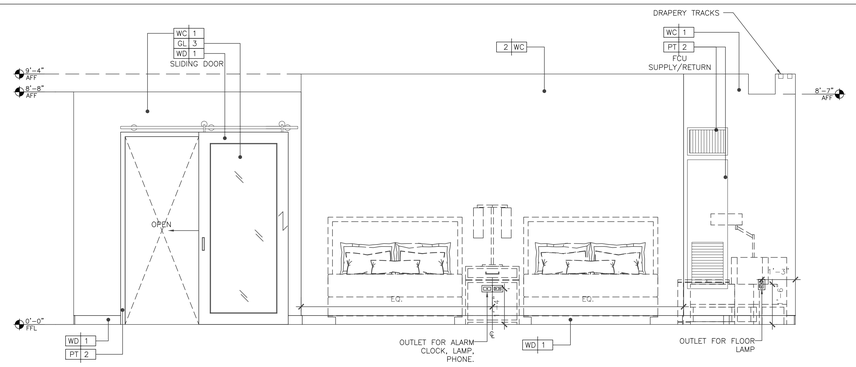

4 DQ-2 BEDROOM ELEVATION
Scale: 1/2"=1'-0"

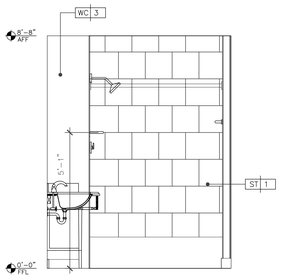

5 DQ-2 BATH ELEVATION
Scale: 1/2"=1'-0"

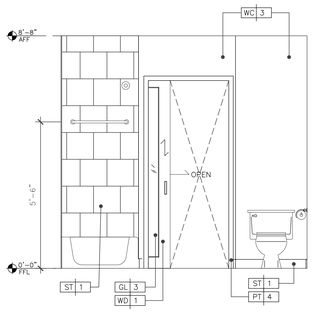

6 DQ-2BATH ELEVATION
Scale: 1/2"=1'-0"

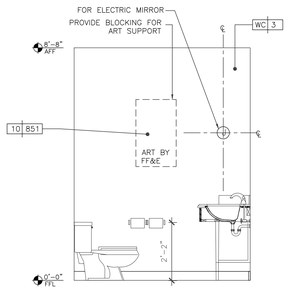

7 DQ-2 BATH ELEVATION
Scale: 1/2"=1'-0"

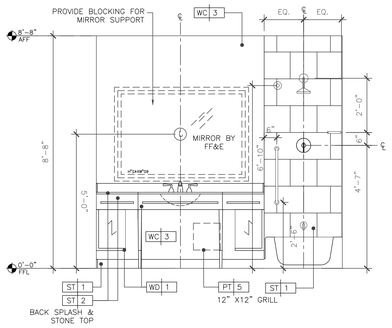

8 DQ-2 BATH ELEVATION
Scale: 1/2"=1'-0"

KEY NOTES

SHEET NOTES

HILTON AMERICAS CONVENTION CENTER HOTEL

OWNER:

HOUSTON CONVENTION CENTER HOTEL CORPORATION

Two Houston Center
909 Fannin, Suite 3210
Houston TX 77010
Telephone 713.437.6898
Facsimile 713.437.6938

DEVELOPMENT MANAGER:

INTERIOR ARCHITECT:

Wilson Associates
Interior Architectural Design

3811 Turtle Creek Blvd.
16th Floor Dallas, Texas
75219 Tel (214) 521-6753
Fax (214) 521-0207

Issue	Date & Issue Description	By	Check
--	-- / -- / --	--	--

Seal/Signature

REGISTERED INTERIOR DESIGNER
CONSTANCE H. JACKSON
1433
STATE OF TEXAS

Constance H. Jackson
10-18-2018

Project Name
HILTON AMERICAS CONVENTION CENTER HOTEL

Project Number
4993

CAD File Name
ID.321.DQ1-2 ELEVATION.DWG

Description
GUESTROOM DQ-2 ELEVATIONS

Scale
0 2" 4" 8" 16"

ID.321A.DQ-2

©2001 Gensler

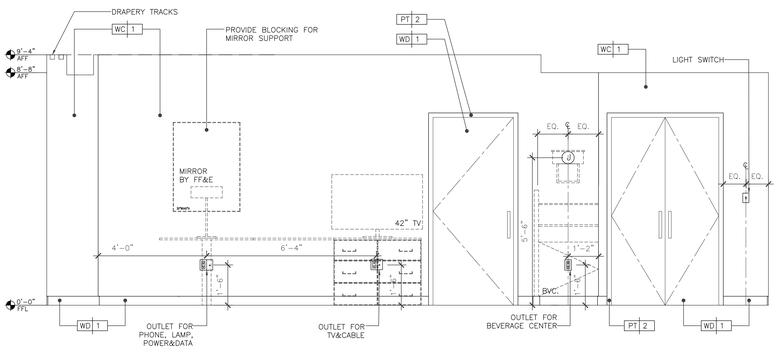

1 KING (K2) BEDROOM ELEVATION
Scale: 1/2"=1'-0"

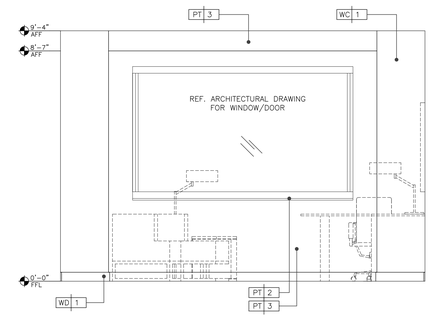

2 KING (K2) BEDROOM ELEVATION
Scale: 1/2"=1'-0"

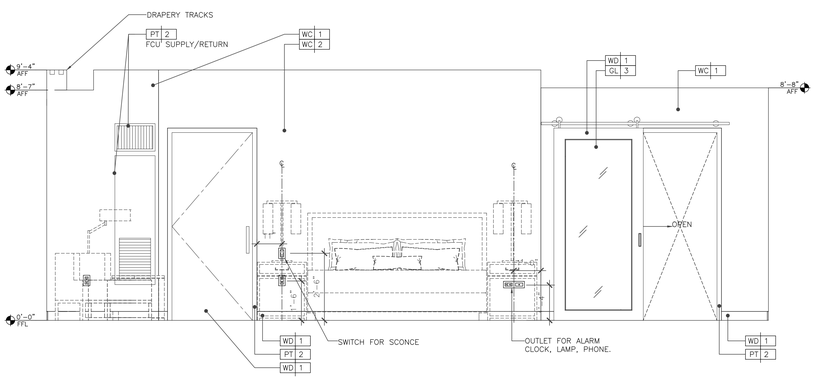

3 KING (K3) BEDROOM ELEVATION
Scale: 1/2"=1'-0"

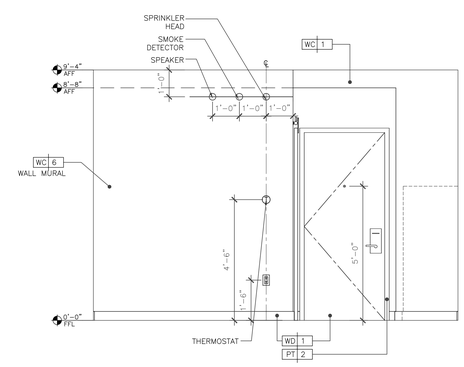

4 KING (K3) BEDROOM ELEVATION
Scale: 1/2"=1'-0"

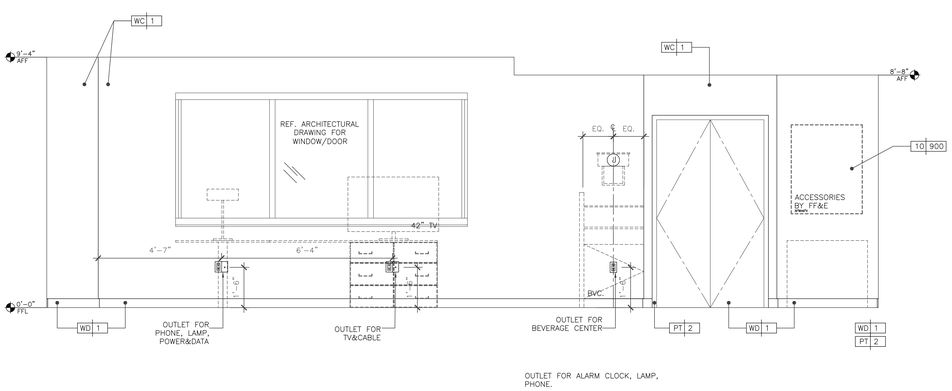

5 KING (K4) BEDROOM ELEVATION
Scale: 1/2"=1'-0"

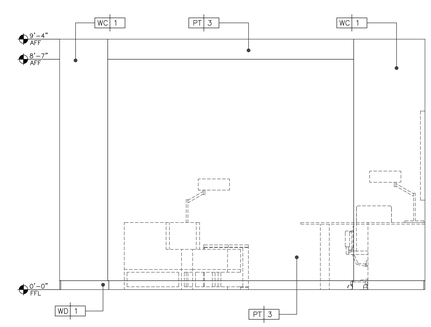

6 KING (K6) BEDROOM ELEVATION
Scale: 1/2"=1'-0"

KEY NOTES

SHEET NOTES

HILTON AMERICAS CONVENTION CENTER HOTEL

OWNER:

HOUSTON CONVENTION CENTER HOTEL CORPORATION

Two Houston Center
909 Fannin, Suite 3210
Houston TX 77010
Telephone 713.437.6898
Facsimile 713.437.6938

DEVELOPMENT MANAGER:

INTERIOR ARCHITECT:

Wilson Associates
Interior Architectural Design

3811 Turtle Creek Blvd.
16th Floor Dallas, Texas
75219 Tel (214) 521-6753
Fax (214) 521-0207

Issue	Date & Issue Description	By	Check
--	-- / -- / --	--	--

Seal/Signature

REGISTERED INTERIOR DESIGNER CONSTANCE H. GARLTON 1433 STATE OF TEXAS

Constance H. Garlton 10-18-2018

Project Name
HILTON AMERICAS CONVENTION CENTER HOTEL

Project Number
4993

CAD File Name
ID.322.K2-5.DWG

Description
GUESTROOM K-2, K-3, K-4, K-5 KEY ELEVATIONS

Scale
0 2" 4" 8" 16"

ID.322.K2-5

©2001 Gensler

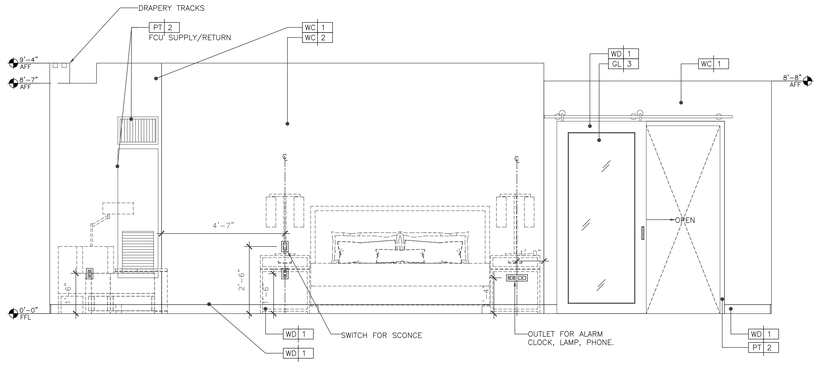

1 KING (K6) BEDROOM ELEVATION
Scale: 1/2"=1'-0"

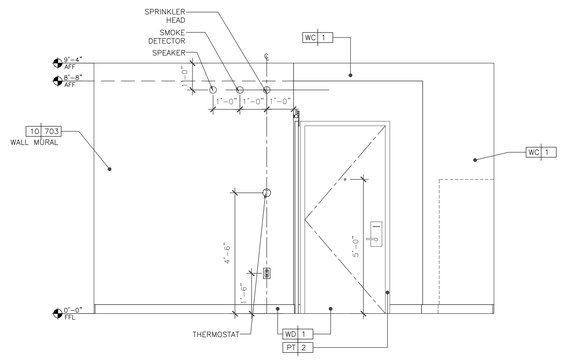

2 KING (K6) BEDROOM ELEVATION
Scale: 1/2"=1'-0"

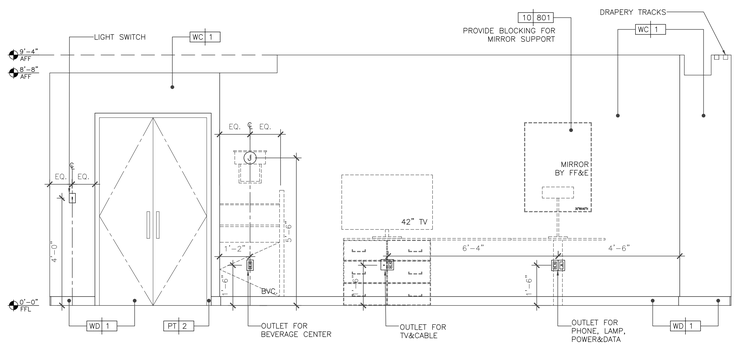

3 KING (K7) BEDROOM ELEVATION
Scale: 1/2"=1'-0"

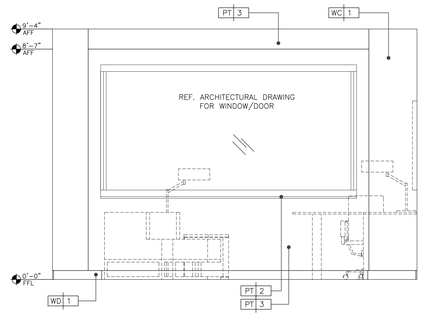

4 KING (K7) BEDROOM ELEVATION
Scale: 1/2"=1'-0"

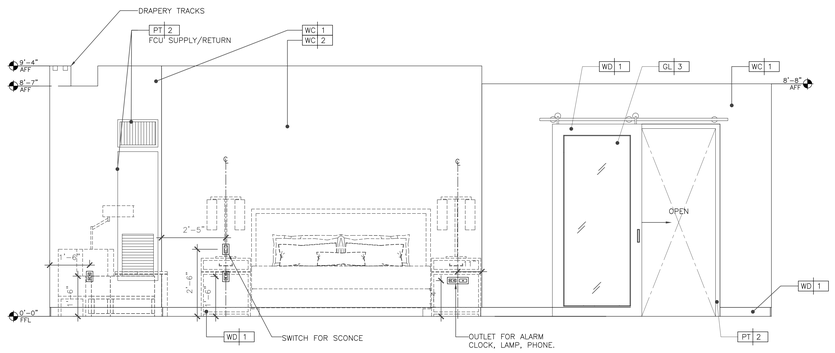

5 KING (K8) BEDROOM ELEVATION
Scale: 1/2"=1'-0"

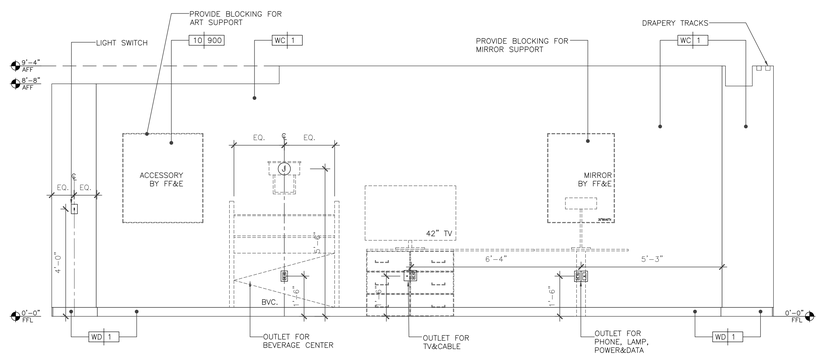

6 KING (K8) BEDROOM ELEVATION
Scale: 1/2"=1'-0"

KEY NOTES

SHEET NOTES

HILTON AMERICAS CONVENTION CENTER HOTEL

OWNER:
HOUSTON CONVENTION CENTER HOTEL CORPORATION
DEVELOPMENT MANAGER:
Two Houston Center
909 Fannin, Suite 3210
Houston TX 77010
Telephone 713.437.6898
Facsimile 713.437.6938

INTERIOR ARCHITECT:
Wilson Associates
Interior Architectural Design
3811 Turtle Creek Blvd.
16th Floor Dallas, Texas
75219 Tel (214) 521-6753
Fax (214) 521-0207

Issue	Date & Issue Description	By	Check
--	--/--/--	--	--

Seal/Signature

REGISTERED INTERIOR DESIGNER CONSTANCE H. JACKSON 1433 STATE OF TEXAS

Constance H. Jackson 10-18-2018

Project Name
HILTON AMERICAS CONVENTION CENTER HOTEL

Project Number
4993

CAD File Name
ID.323.K6-8.DWG

Description
GUESTROOM K-6, K-7, K-8 KEY ELEVATIONS

Scale
0 2" 4" 8" 16"

ID.323.K6-8

©2001 Gensler

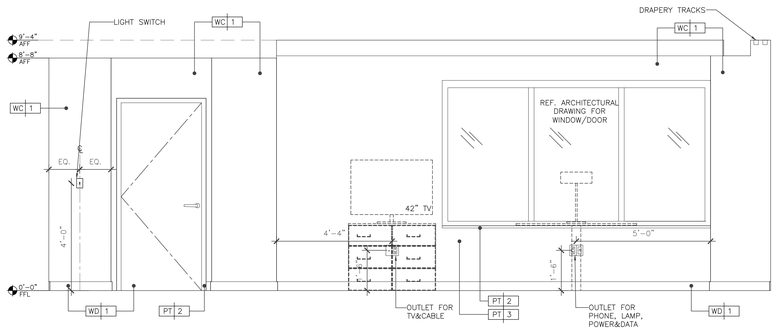

1 DQ-3 BEDROOM ELEVATION
Scale: 1/2"=1'-0"

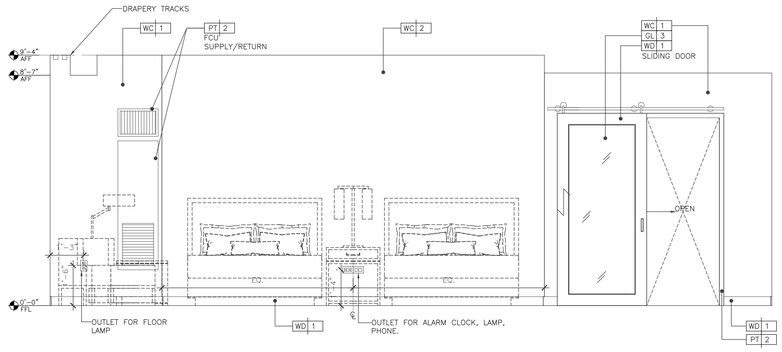

2 DQ-3 BEDROOM ELEVATION
Scale: 1/2"=1'-0"

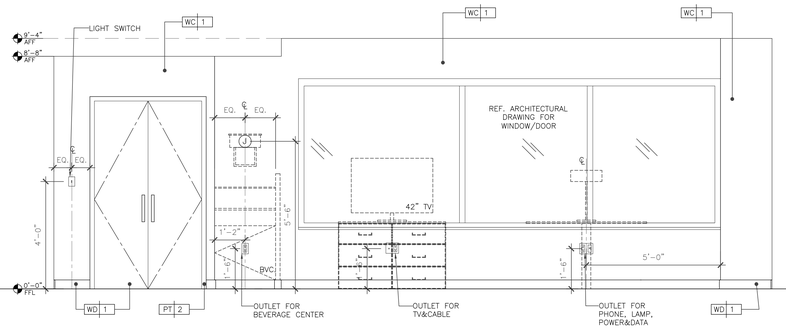

3 DQ-4 BEDROOM ELEVATION
Scale: 1/2"=1'-0"

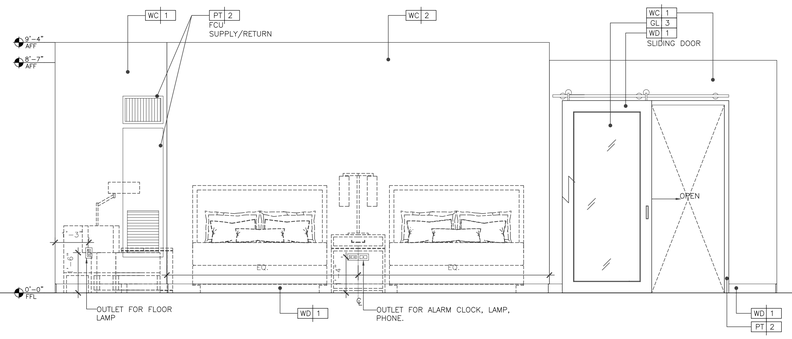

4 DQ-4 BEDROOM ELEVATION
Scale: 1/2"=1'-0"

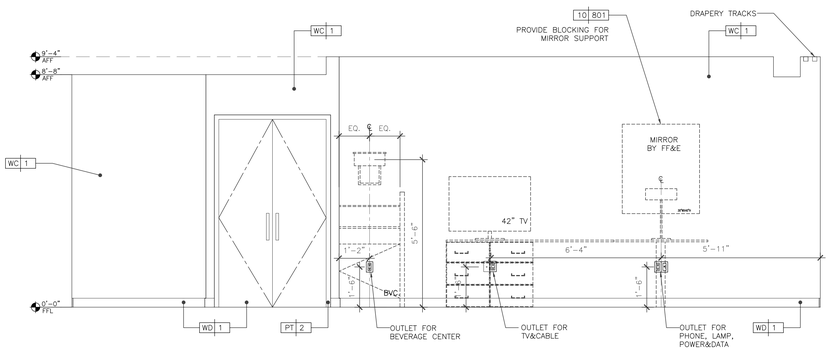

5 DQ-5 BEDROOM ELEVATION
Scale: 1/2"=1'-0"

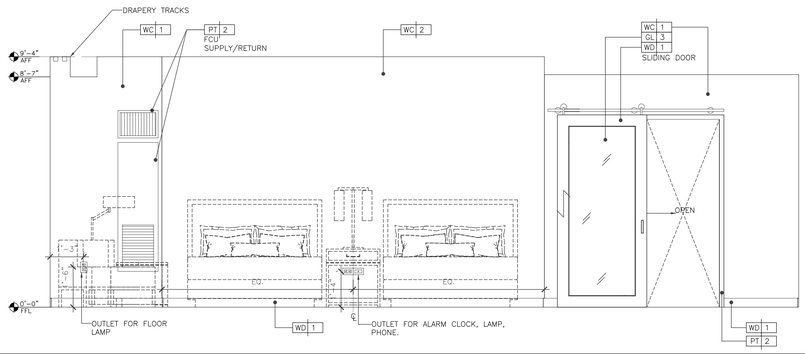

6 DQ-5 BEDROOM ELEVATION
Scale: 1/2"=1'-0"

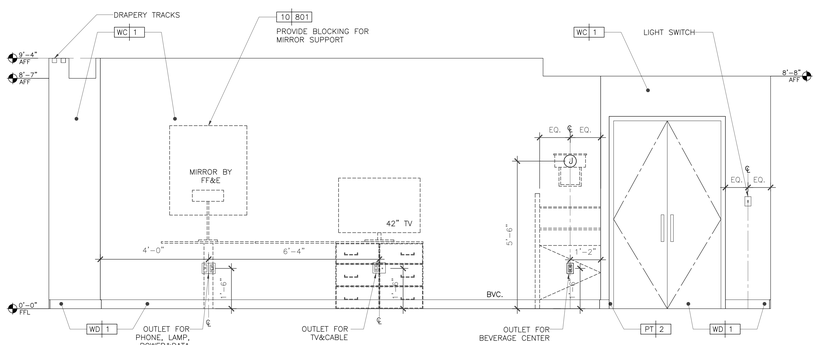

7 DQ-6 BEDROOM ELEVATION
Scale: 1/2"=1'-0"

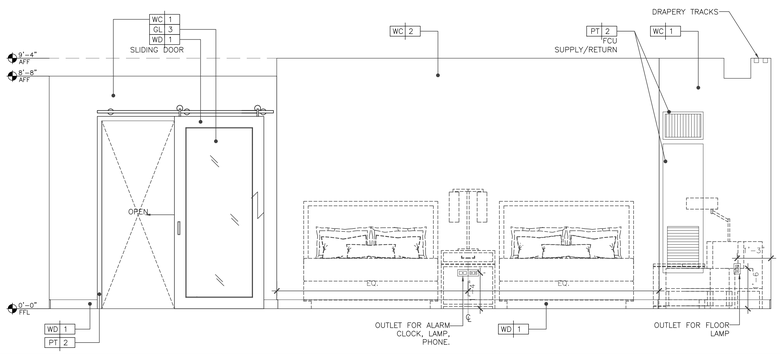

8 DQ-6 BEDROOM ELEVATION
Scale: 1/2"=1'-0"

KEY NOTES

SHEET NOTES

HILTON AMERICAS CONVENTION CENTER HOTEL

OWNER:

HOUSTON CONVENTION CENTER HOTEL CORPORATION

Two Houston Center
909 Fannin, Suite 3210
Houston TX 77010
Telephone 713.437.6898
Facsimile 713.437.6938

DEVELOPMENT MANAGER:

INTERIOR ARCHITECT:

Wilson Associates
Interior Architectural Design

3811 Turtle Creek Blvd.
16th Floor Dallas, Texas
75219 Tel (214) 521-6753
Fax (214) 521-0207

Issue	Date & Issue Description	By	Check
--	-- / -- / --	--	--

Seal/Signature

REGISTERED INTERIOR DESIGNER CONSTANCE H. JACKSON 1433 STATE OF TEXAS

Constance H. Jackson

Project Name 10-18-2018

HILTON AMERICAS CONVENTION CENTER HOTEL

Project Number

4993

CAD File Name

ID.324.DQ3-6

Description

GUESTROOM DQ-3, DQ-4, DQ-5, DQ-6 - ELEVATIONS

Scale

0 2" 4" 8" 16"

ID.324.DQ3-6

©2001 Gensler

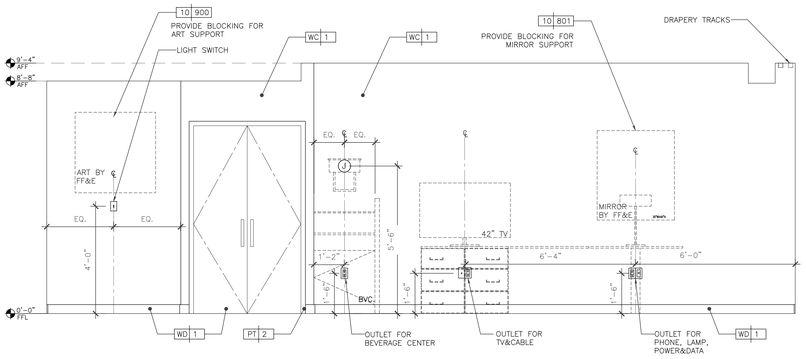

1 DQ-7 BEDROOM ELEVATION
Scale: 1/2"=1'-0"

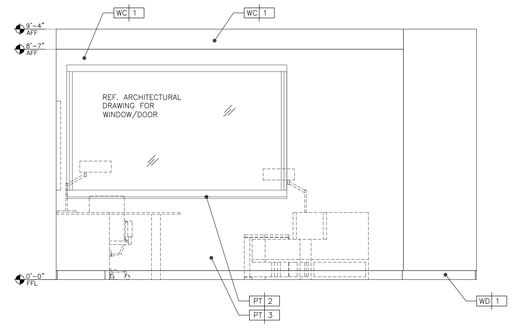

2 DQ-7 BEDROOM ELEVATION
Scale: 1/2"=1'-0"

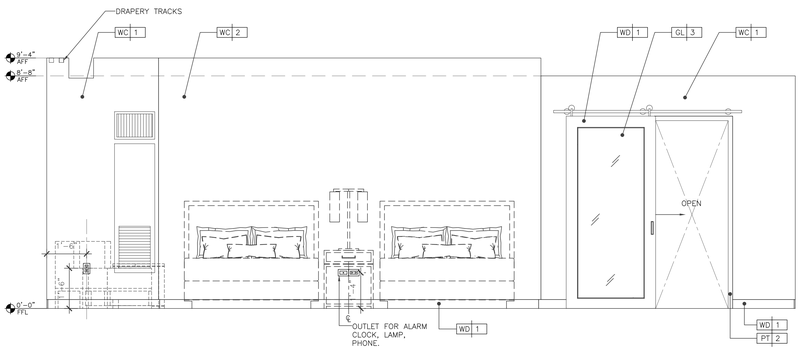

3 DQ-7 BEDROOM ELEVATION
Scale: 1/2"=1'-0"

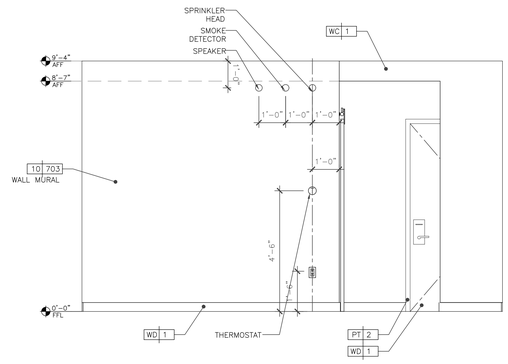

4 DQ-7 BEDROOM ELEVATION
Scale: 1/2"=1'-0"

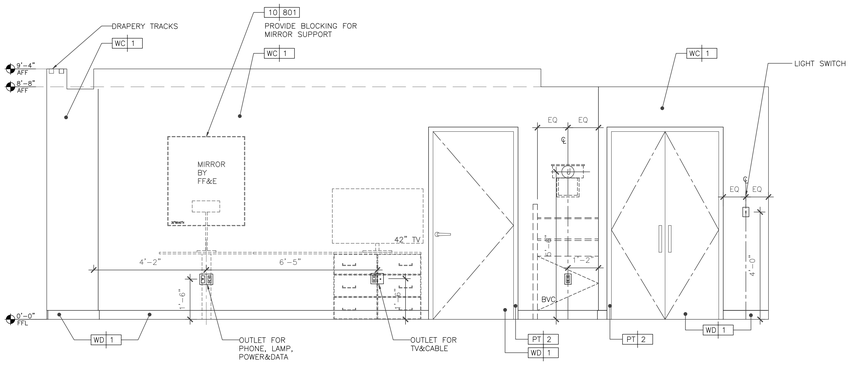

5 DQ-8 BEDROOM ELEVATION
Scale: 1/2"=1'-0"

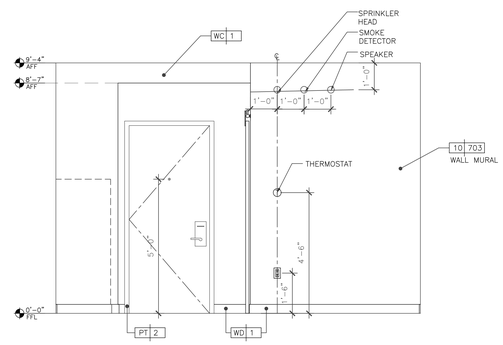

6 DQ-8 BEDROOM ELEVATION
Scale: 1/2"=1'-0"

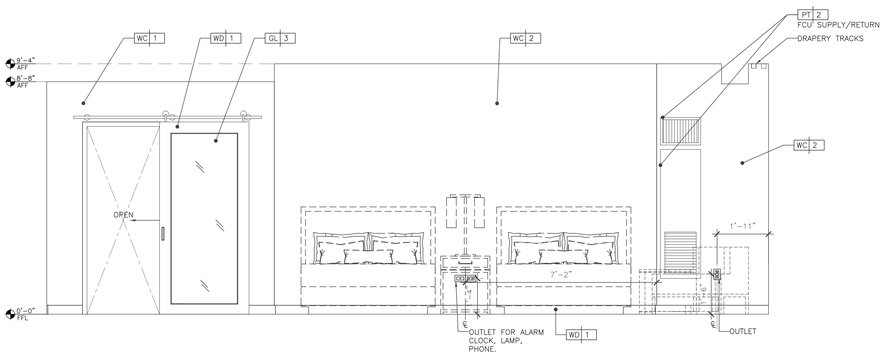

7 DQ-8 BEDROOM ELEVATION
Scale: 1/2"=1'-0"

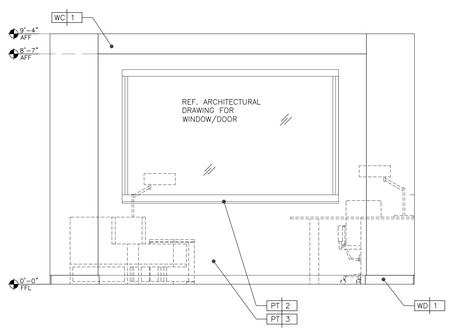

8 DQ-8 BEDROOM ELEVATION
Scale: 1/2"=1'-0"

KEY NOTES

SHEET NOTES

HILTON AMERICAS CONVENTION CENTER HOTEL

OWNER:

HOUSTON CONVENTION CENTER HOTEL CORPORATION

Two Houston Center
909 Fannin, Suite 3210
Houston TX 77010
Telephone 713.437.6898
Facsimile 713.437.6938

DEVELOPMENT MANAGER:

INTERIOR ARCHITECT:

Wilson Associates
Interior Architectural Design

3811 Turtle Creek Blvd.
16th Floor Dallas, Texas
75219 Tel (214) 521-6753
Fax (214) 521-0207

Issue	Date & Issue Description	By	Check
--	-- / -- / --	--	--

Seal/Signature

REGISTERED INTERIOR DESIGNER CONSTANCE H. JACKSON 1433 STATE OF TEXAS

Constance H. Jackson 10-18-2018

Project Name

HILTON AMERICAS CONVENTION CENTER HOTEL

Project Number

4993

CAD File Name

ID.325.DQ7-8

Description

GUESTROOM DQ-7, DQ-8 KEY ELEVATIONS

Scale

0 2" 4" 8" 16"

ID.325.DQ7-8

©2001 Gensler

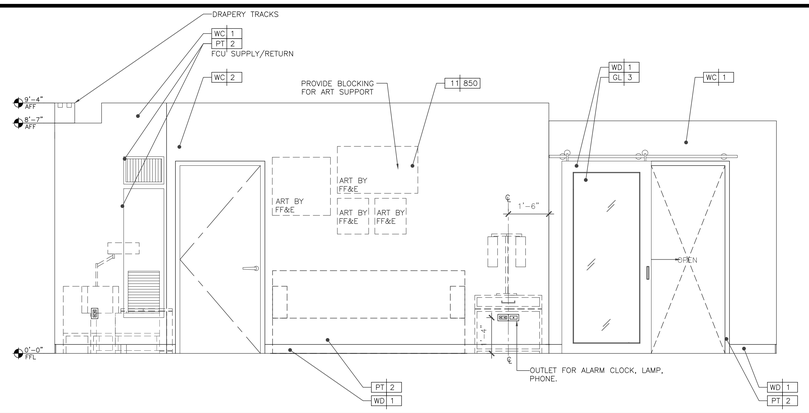

1 PARLOR S-1 BEDROOM ELEVATION
Scale: 1/2"=1'-0"

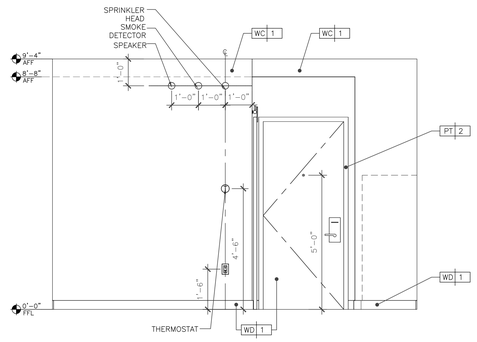

2 PARLOR S-1 BEDROOM ELEVATION
Scale: 1/2"=1'-0"

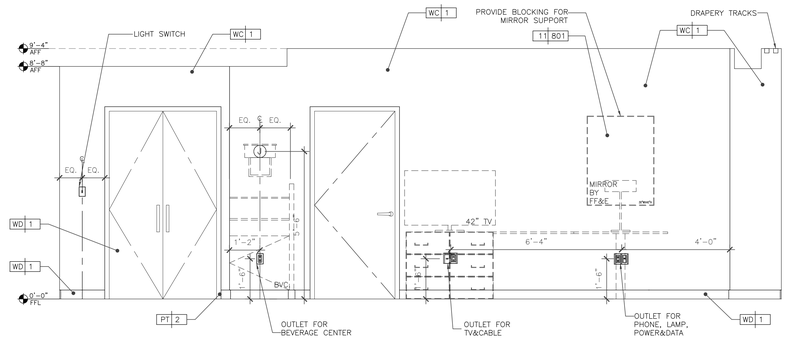

3 PARLOR S-1 BEDROOM ELEVATION
Scale: 1/2"=1'-0"

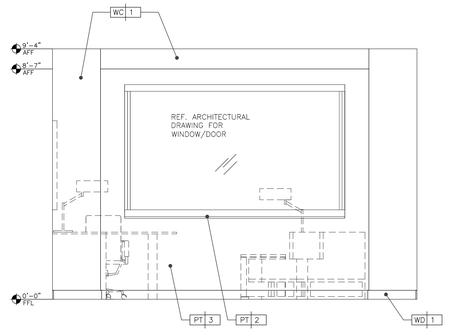

4 PARLOR S-1 BEDROOM ELEVATION
Scale: 1/2"=1'-0"

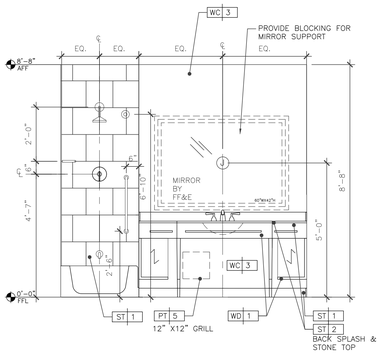

5 PARLOR S-1 BATH ELEVATION
Scale: 1/2"=1'-0"

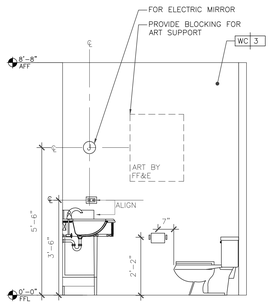

6 PARLOR S-1 BATH ELEVATION
Scale: 1/2"=1'-0"

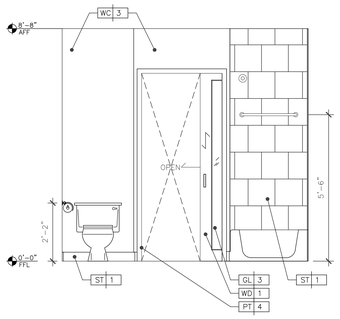

7 PARLOR S-1 BATH ELEVATION
Scale: 1/2"=1'-0"

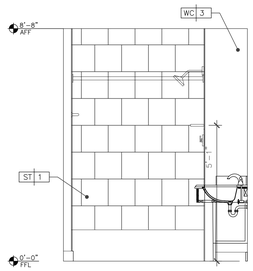

8 PARLOR S-1 BATH ELEVATION
Scale: 1/2"=1'-0"

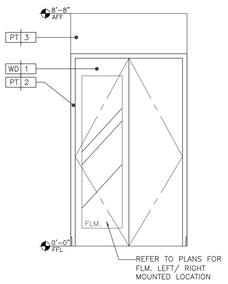

9 CLOSET ELEVATION
Scale: 1/2"=1'-0"

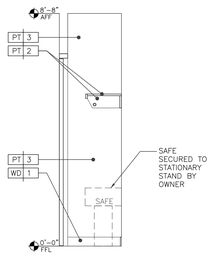

10 CLOSET ELEVATION
Scale: 1/2"=1'-0"

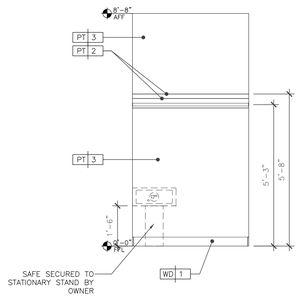

11 CLOSET ELEVATION
Scale: 1/2"=1'-0"

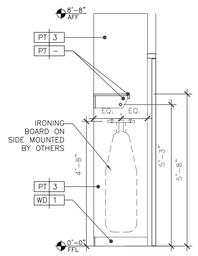

12 CLOSET ELEVATION
Scale: 1/2"=1'-0"

KEY NOTES

SHEET NOTES

HILTON AMERICAS CONVENTION CENTER HOTEL

OWNER:

HOUSTON CONVENTION CENTER HOTEL CORPORATION

Two Houston Center
909 Fannin, Suite 3210
Houston TX 77010
Telephone 713.437.6898
Facsimile 713.437.6938

DEVELOPMENT MANAGER:

INTERIOR ARCHITECT:

Wilson Associates
Interior Architectural Design

3811 Turtle Creek Blvd.
16th Floor Dallas, Texas
75219 Tel (214) 521-6753
Fax (214) 521-0207

Issue	Date & Issue Description	By	Check
--	-- / -- / --	--	--

Seal/Signature

REGISTERED INTERIOR DESIGNER CONSTANCE H. JACKSON 1433 STATE OF TEXAS

Constance H. Jackson 10-18-2018

Project Name
HILTON AMERICAS CONVENTION CENTER HOTEL

Project Number
4993

CAD File Name
ID.330.PS1

Description
INTERIOR ELEVATION

Scale
0 2" 4" 8" 16"

ID.330.PS1

©2001 Gensler

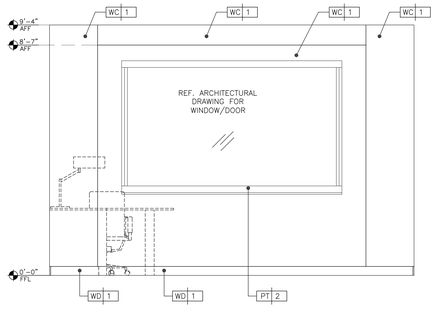

1 PARLOR S-2 BEDROOM ELEVATION
Scale: 1/2"=1'-0"

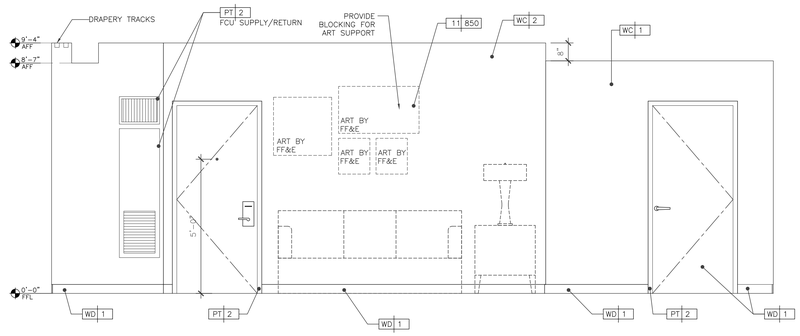

2 PARLOR S-2 BEDROOM ELEVATION
Scale: 1/2"=1'-0"

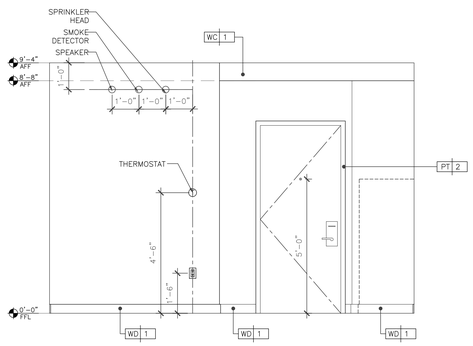

3 PARLOR S-2 BEDROOM ELEVATION
Scale: 1/2"=1'-0"

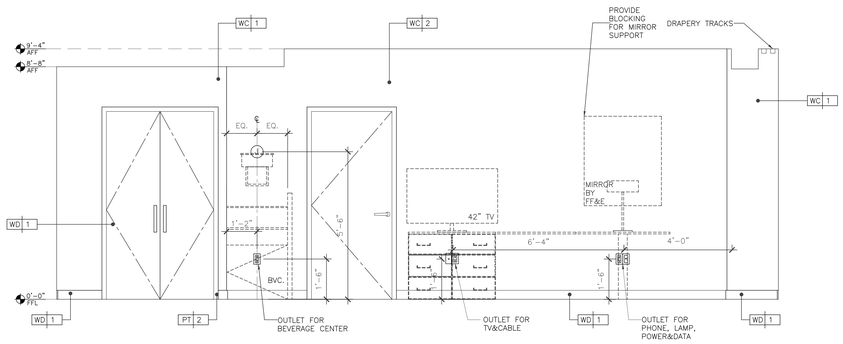

4 PARLOR S-2 BEDROOM ELEVATION
Scale: 1/2"=1'-0"

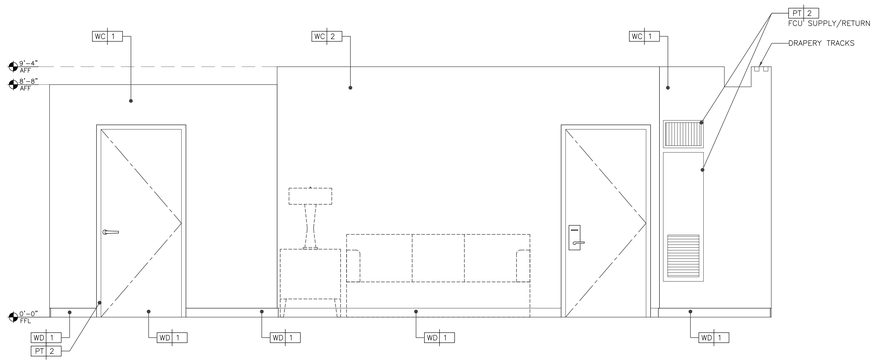

5 PARLOR S-6 BEDROOM ELEVATION
Scale: 1/2"=1'-0"

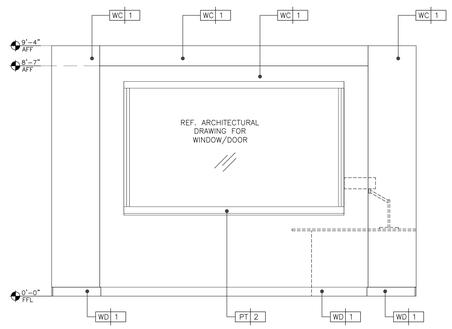

6 PARLOR S-6 BEDROOM ELEVATION
Scale: 1/2"=1'-0"

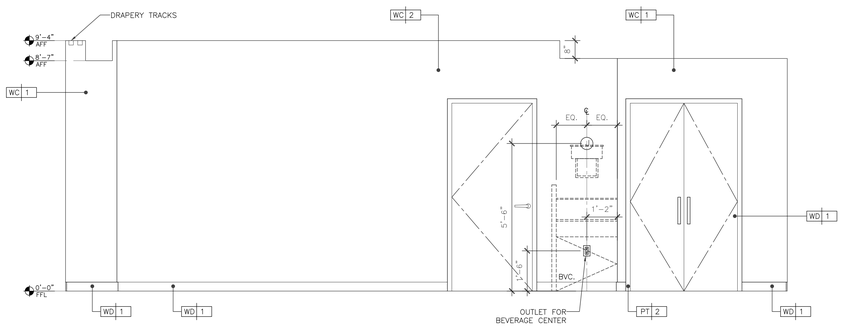

7 PARLOR S-6 BEDROOM ELEVATION
Scale: 1/2"=1'-0"

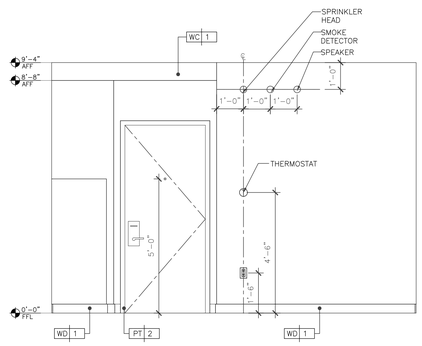

8 PARLOR S-6 BEDROOM ELEVATION
Scale: 1/2"=1'-0"

KEY NOTES

SHEET NOTES

HILTON AMERICAS CONVENTION CENTER HOTEL

OWNER:

HOUSTON CONVENTION CENTER HOTEL CORPORATION

Two Houston Center
909 Fannin, Suite 3210
Houston TX 77010
Telephone 713.437.6898
Facsimile 713.437.6938

DEVELOPMENT MANAGER:

INTERIOR ARCHITECT:

Wilson Associates
Interior Architectural Design

3811 Turtle Creek Blvd.
16th Floor Dallas, Texas
75219 Tel (214) 521-6753
Fax (214) 521-0207

Issue	Date & Issue Description	By	Check
--	-- -- / -- -- / -- --	-- --	-- --

Seal/Signature

REGISTERED INTERIOR DESIGNER
CONSTANCE H. JACKSON
1433
STATE OF TEXAS

10-18-2018

Project Name
HILTON AMERICAS CONVENTION CENTER HOTEL

Project Number
4993

CAD File Name
ID.331.PS2.5.6_ELEVATION

Description
PARLOR S-2, S-5, S-6 KEY ELEVATIONS

Scale
0 2" 4" 8" 16"

ID.331.PS2.5.6

©2001 Gensler

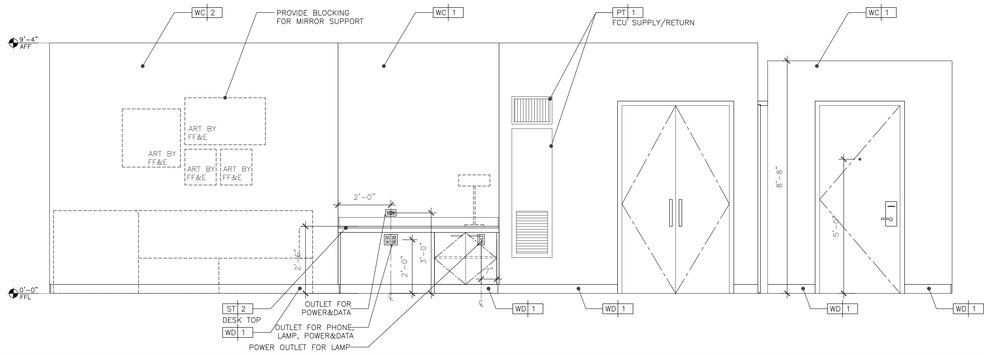

1 PARLOR S-5 BEDROOM ELEVATION
Scale: 1/2"=1'-0"

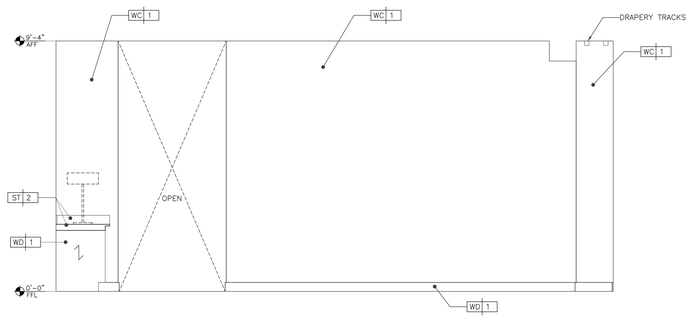

2 PARLOR S-5 BEDROOM ELEVATION
Scale: 1/2"=1'-0"

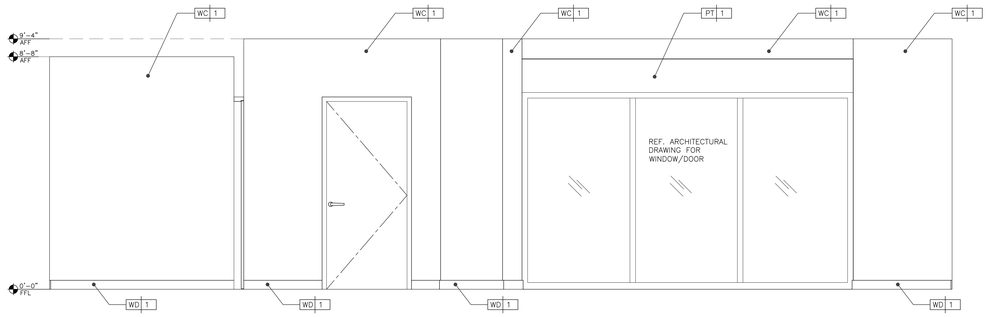

3 PARLOR S-5 BEDROOM ELEVATION
Scale: 1/2"=1'-0"

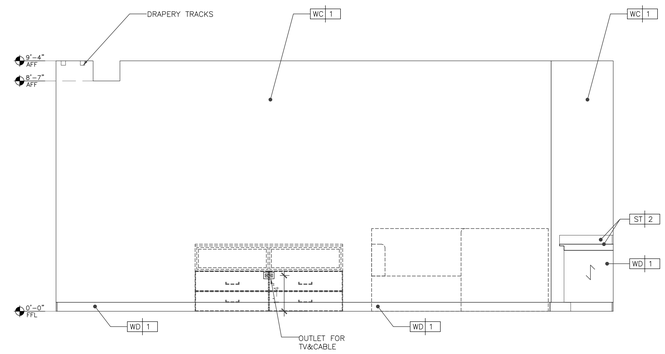

4 PARLOR S-5 BEDROOM ELEVATION
Scale: 1/2"=1'-0"

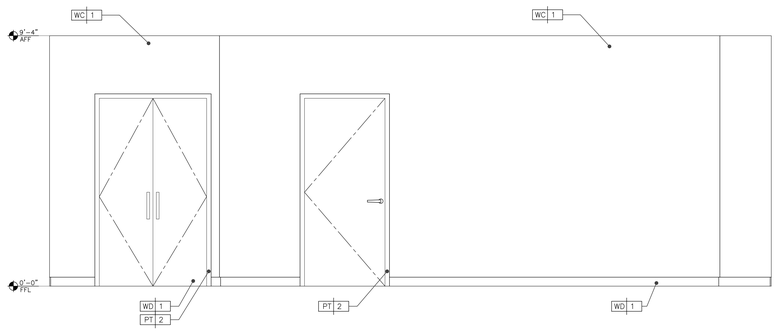

5 PARLOR S-5 BEDROOM ELEVATION
Scale: 1/2"=1'-0"

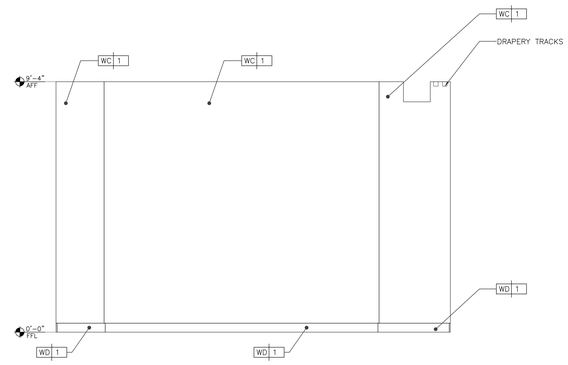

6 PARLOR S-5 BEDROOM ELEVATION
Scale: 1/2"=1'-0"

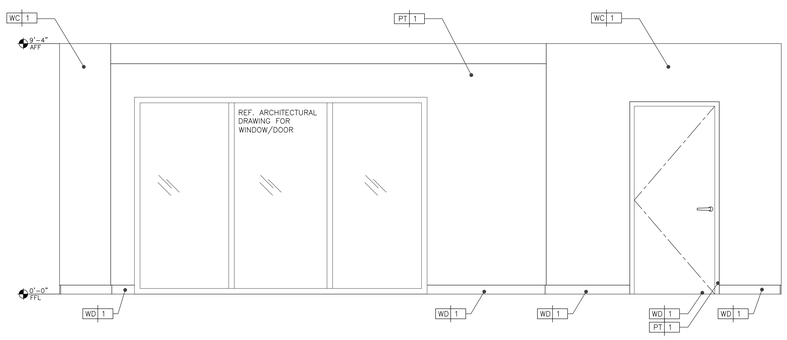

7 PARLOR S-5 BEDROOM ELEVATION
Scale: 1/2"=1'-0"

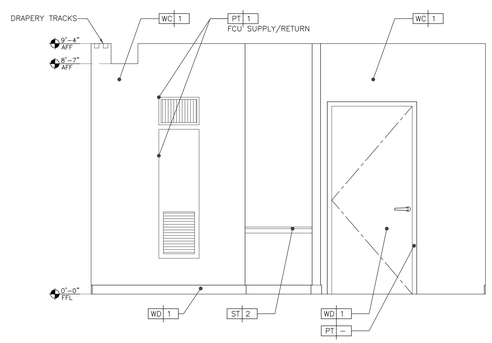

8 PARLOR S-5 BEDROOM ELEVATION
Scale: 1/2"=1'-0"

KEY NOTES

SHEET NOTES

HILTON AMERICAS CONVENTION CENTER HOTEL

OWNER:

HOUSTON CONVENTION CENTER HOTEL CORPORATION

Two Houston Center
909 Fannin, Suite 3210
Houston TX 77010
Telephone 713.437.6898
Facsimile 713.437.6938

DEVELOPMENT MANAGER:

INTERIOR ARCHITECT:

Wilson Associates
Interior Architectural Design

3811 Turtle Creek Blvd.
16th Floor Dallas, Texas
75219 Tel (214) 521-6753
Fax (214) 521-0207

Issue	Date & Issue Description	By	Check
-- --	-- -- / -- -- / -- --	-- --	-- --

Seal/Signature

REGISTERED INTERIOR DESIGNER CONSTANCE H. JACKSON 1433 STATE OF TEXAS

10-18-2018

Project Name

HILTON AMERICAS CONVENTION CENTER HOTEL

Project Number

4993

CAD File Name

ID.331.PS2.5.6_ELEVATION

Description

PARLOR S-2, S-5, S-6 KEY ELEVATIONS

Scale

0 2" 4" 8" 16"

ID.331A.PS2.5.6

©2001 Gensler

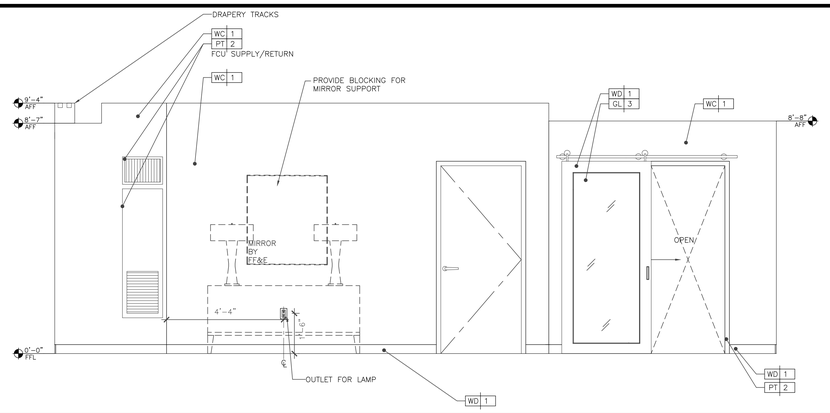

1 PARLOR S-3 BEDROOM ELEVATION
Scale: 1/2"=1'-0"

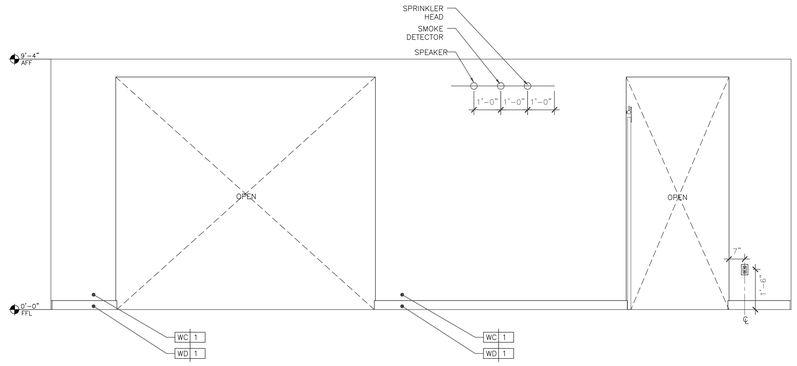

2 PARLOR S-3 BEDROOM ELEVATION
Scale: 1/2"=1'-0"

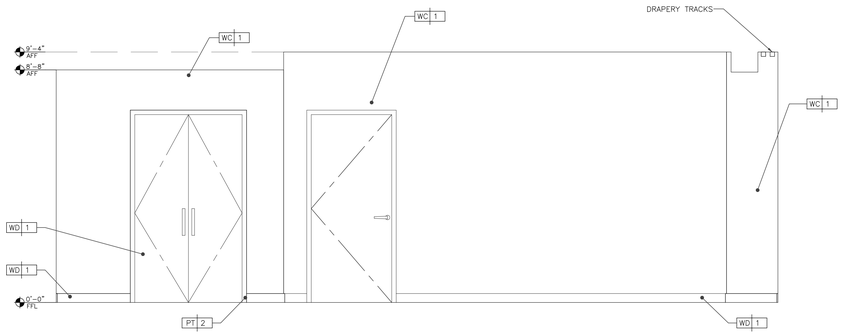

3 PARLOR S-3 BEDROOM ELEVATION
Scale: 1/2"=1'-0"

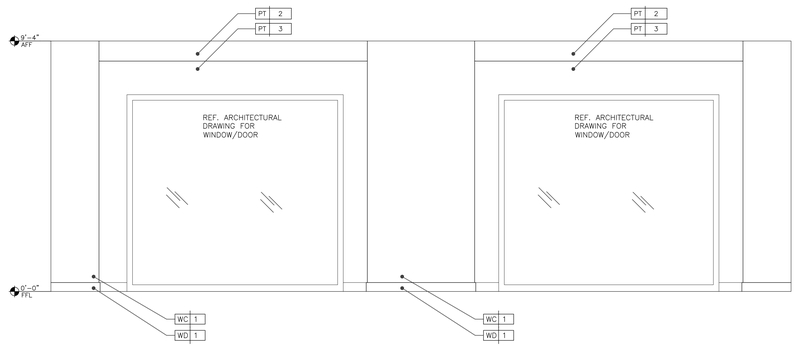

4 PARLOR S-3 BEDROOM ELEVATION
Scale: 1/2"=1'-0"

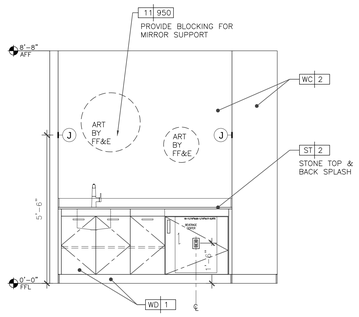

5 PARLOR S-3 PANTRY ELEVATION
Scale: 1/2"=1'-0"

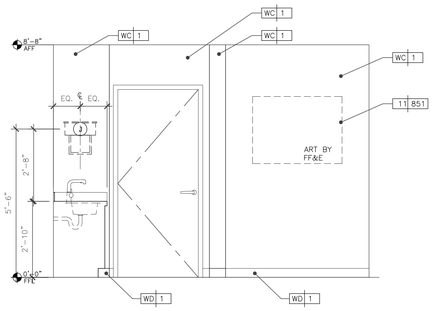

6 PARLOR S-3 PANTRY ELEVATION
Scale: 1/2"=1'-0"

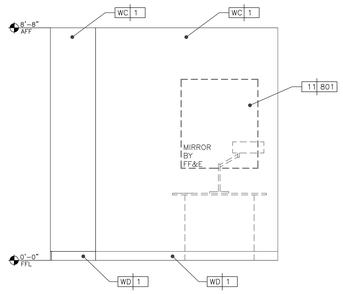

7 PARLOR S-3 PANTRY ELEVATION
Scale: 1/2"=1'-0"

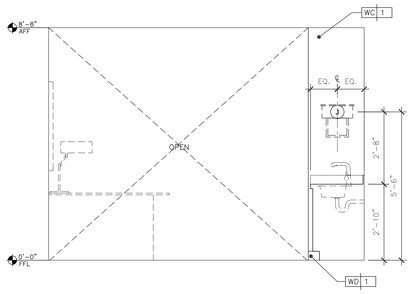

8 PARLOR S-3 PANTRY ELEVATION
Scale: 1/2"=1'-0"

KEY NOTES

SHEET NOTES

HILTON AMERICAS CONVENTION CENTER HOTEL

OWNER:

HOUSTON CONVENTION CENTER HOTEL CORPORATION

Two Houston Center
909 Fannin, Suite 3210
Houston TX 77010
Telephone 713.437.6898
Facsimile 713.437.6938

DEVELOPMENT MANAGER:

INTERIOR ARCHITECT:

Wilson Associates
Interior Architectural Design

3811 Turtle Creek Blvd.
16th Floor Dallas, Texas
75219 Tel (214) 521-6753
Fax (214) 521-0207

Issue	Date & Issue Description	By	Check
-- --	-- -- / -- -- / -- --	-- --	-- --

Seal/Signature

REGISTERED INTERIOR DESIGNER CONSTANCE H. JACKSON 1433 STATE OF TEXAS

Constance H. Jackson 10-18-2018

Project Name
HILTON AMERICAS CONVENTION CENTER HOTEL

Project Number
4993

CAD File Name
ID.332.PS.3.4.11.DWG

Description
PARLOR SUITE 3 ELEVATION

Scale
0 2" 4" 8" 16"

ID.332.PS.3-11

©2001 Gensler

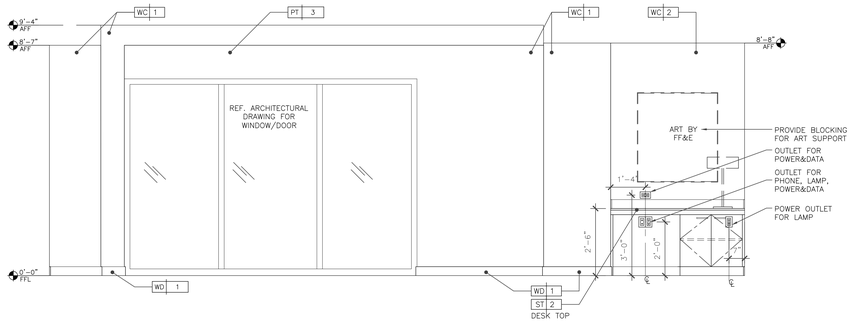

1 PARLOR S-4 BEDROOM ELEVATION
Scale: 1/2"=1'-0"

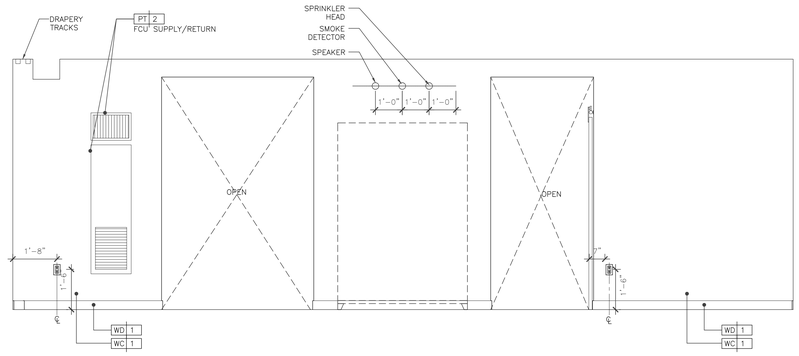

2 PARLOR S-4 BEDROOM ELEVATION
Scale: 1/2"=1'-0"

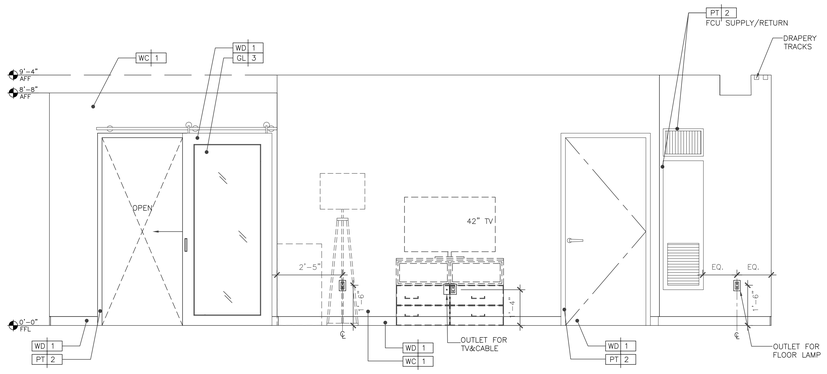

3 PARLOR S-4 BEDROOM ELEVATION
Scale: 1/2"=1'-0"

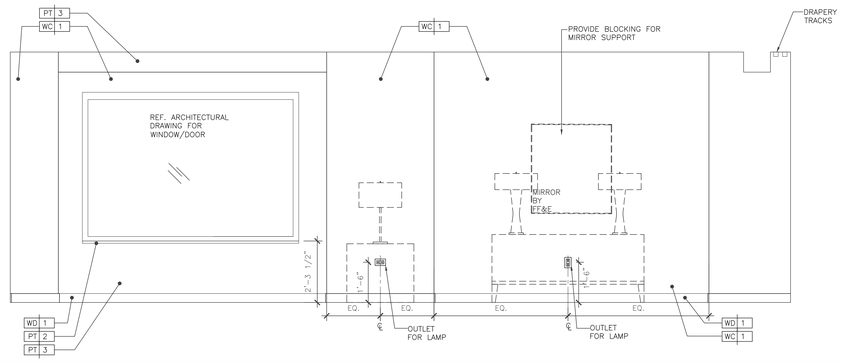

4 PARLOR S-4 BEDROOM ELEVATION
Scale: 1/2"=1'-0"

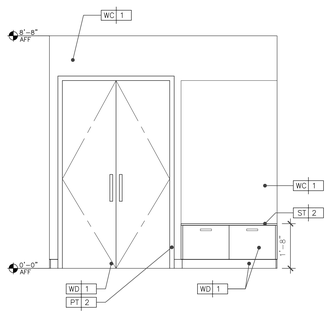

5 PARLOR S-4 FOYER ELEVATION
Scale: 1/2"=1'-0"

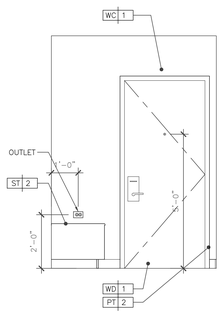

6 PARLOR S-4 FOYER ELEVATION
Scale: 1/2"=1'-0"

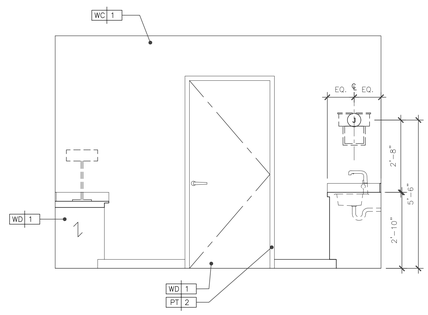

7 PARLOR S-4 PANTRY ELEVATION
Scale: 1/2"=1'-0"

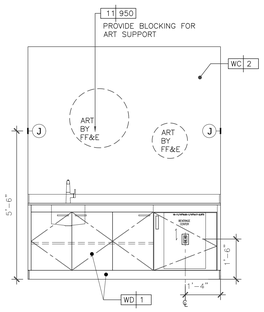

8 PARLOR S-4 PANTRY ELEVATION
Scale: 1/2"=1'-0"

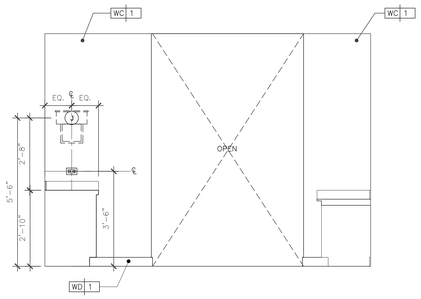

9 PARLOR S-4 PANTRY ELEVATION
Scale: 1/2"=1'-0"

KEY NOTES

SHEET NOTES

HILTON AMERICAS CONVENTION CENTER HOTEL

OWNER:

HOUSTON CONVENTION CENTER HOTEL CORPORATION

Two Houston Center
909 Fannin, Suite 3210
Houston TX 77010
Telephone 713.437.6898
Facsimile 713.437.6938

DEVELOPMENT MANAGER:

INTERIOR ARCHITECT:

Wilson Associates
Interior Architectural Design

3811 Turtle Creek Blvd.
16th Floor Dallas, Texas
75219 Tel (214) 521-6753
Fax (214) 521-0207

Issue	Date & Issue Description	By	Check
-- --	-- -- / -- -- / -- --	-- --	-- --

Seal/Signature

REGISTERED INTERIOR DESIGNER CONSTANCE H. JACKSON 1433 STATE OF TEXAS

Constance H. Jackson
10-18-2018

Project Name
HILTON AMERICAS CONVENTION CENTER HOTEL

Project Number
4993

CAD File Name
ID.332.PS.3.4.11.DWG

Description
PARLOR SUITE 4 ELEVATION

Scale
0 2" 4" 8" 16"

ID.332A.PS.3-11

©2001 Gensler

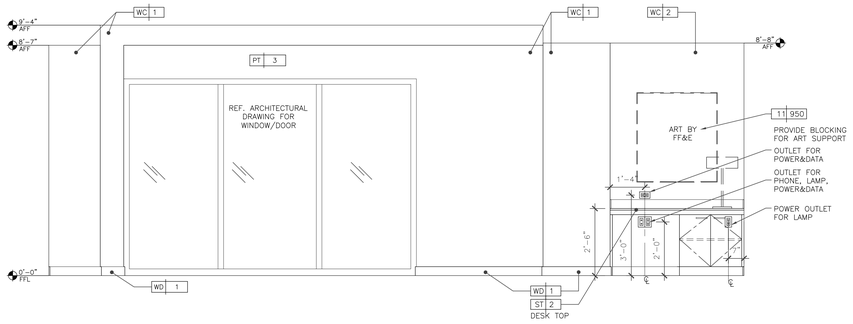

1 PARLOR S-11 BEDROOM ELEVATION
Scale: 1/2"=1'-0"

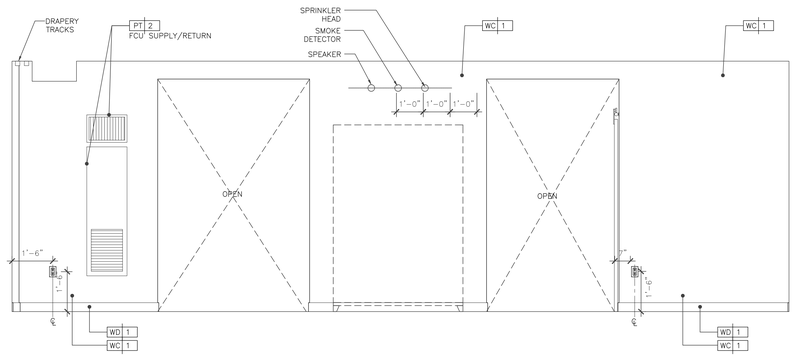

2 PARLOR S-11 BEDROOM ELEVATION
Scale: 1/2"=1'-0"

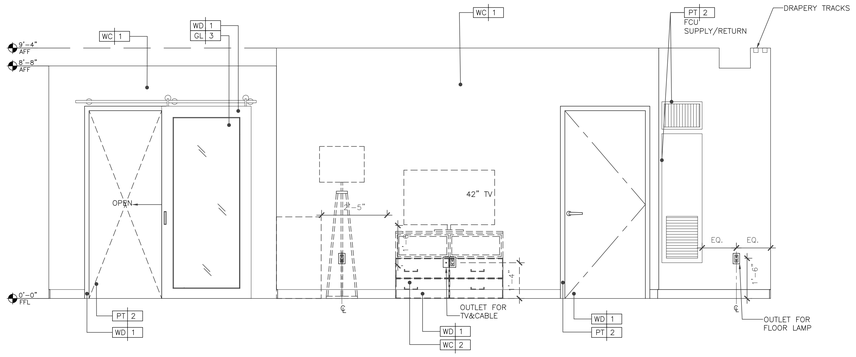

3 PARLOR S-11 BEDROOM ELEVATION
Scale: 1/2"=1'-0"

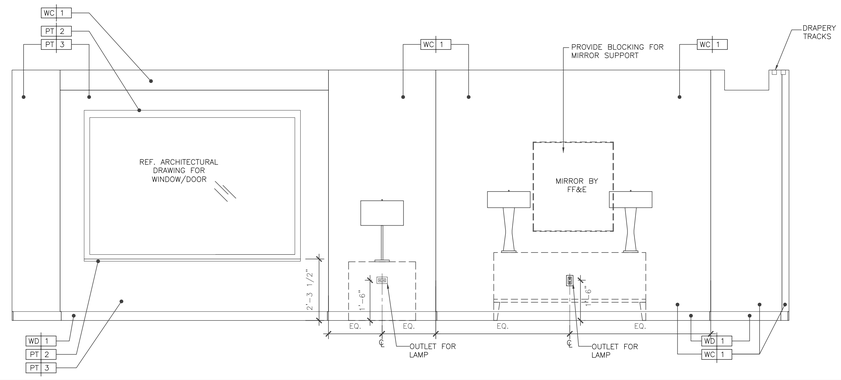

4 PARLOR S-11 BEDROOM ELEVATION
Scale: 1/2"=1'-0"

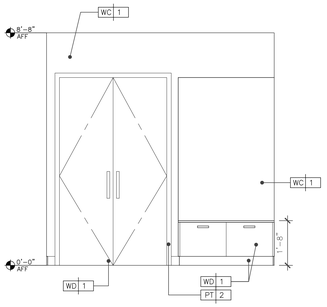

5 PARLOR S-11 FOYER ELEVATION
Scale: 1/2"=1'-0"

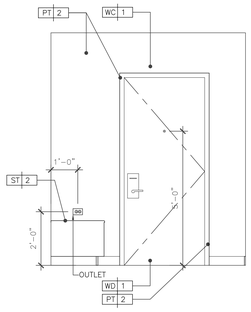

6 PARLOR S-11 FOYER ELEVATION
Scale: 1/2"=1'-0"

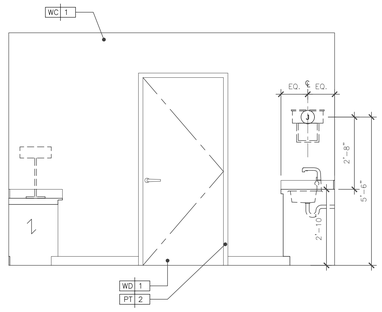

7 PARLOR S-11 PANTRY ELEVATION
Scale: 1/2"=1'-0"

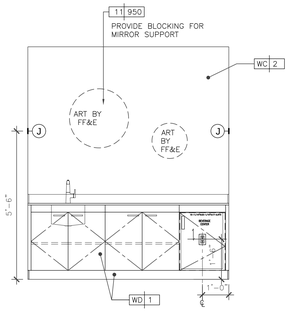

8 PARLOR S-11 PANTRY ELEVATION
Scale: 1/2"=1'-0"

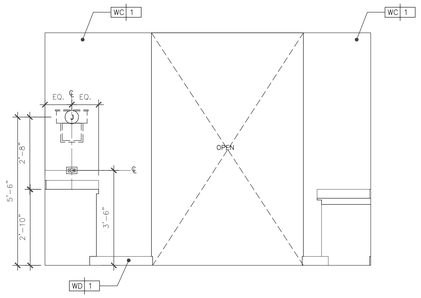

9 PARLOR S-11 PANTRY ELEVATION
Scale: 1/2"=1'-0"

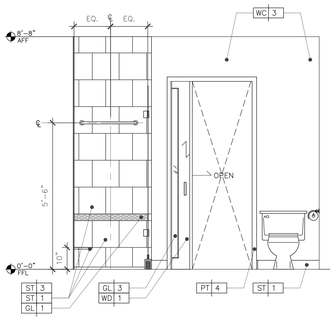

10 PARLOR S-11 BATH ELEVATION
Scale: 1/2"=1'-0"

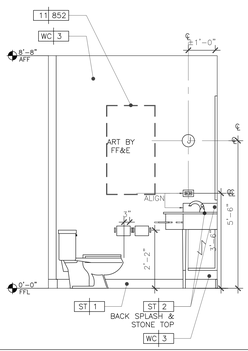

11 PARLOR S-11 BATH ELEVATION
Scale: 1/2"=1'-0"

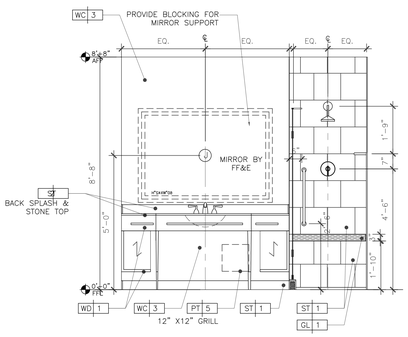

12 PARLOR S-11 BATH ELEVATION
Scale: 1/2"=1'-0"

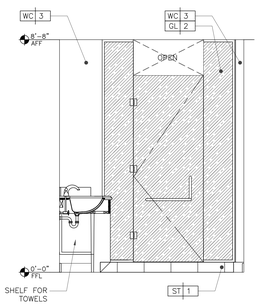

13 PARLOR S-11 BATH ELEVATION
Scale: 1/2"=1'-0"

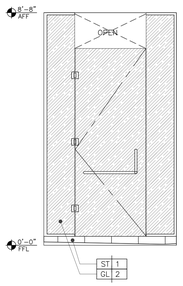

14 PARLOR S-11 BATH ELEVATION
Scale: 1/2"=1'-0"

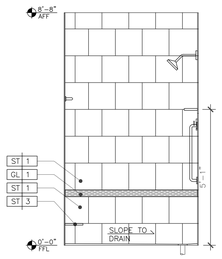

KEY NOTES

SHEET NOTES

HILTON AMERICAS CONVENTION CENTER HOTEL

OWNER:

HOUSTON CONVENTION CENTER HOTEL CORPORATION

Two Houston Center
909 Fannin, Suite 3210
Houston TX 77010
Telephone 713.437.6898
Facsimile 713.437.6938

DEVELOPMENT MANAGER:

INTERIOR ARCHITECT:

Wilson Associates
Interior Architectural Design

3811 Turtle Creek Blvd.
16th Floor Dallas, Texas
75219 Tel (214) 521-6753
Fax (214) 521-0207

Issue	Date & Issue Description	By	Check
-- --	-- -- / -- -- / -- --	-- --	-- --

Seal/Signature

REGISTERED INTERIOR DESIGNER CONSTANCE H. JACKSON 1433 STATE OF TEXAS

10-18-2018

Project Name

HILTON AMERICAS CONVENTION CENTER HOTEL

Project Number

4993

CAD File Name

ID.332.PS.3.4.11.DWG

Description

PARLOR SUITE 11 ELEVATION

Scale

0 2" 4" 8" 16"

ID.332B.PS.3-11

©2001 Gensler

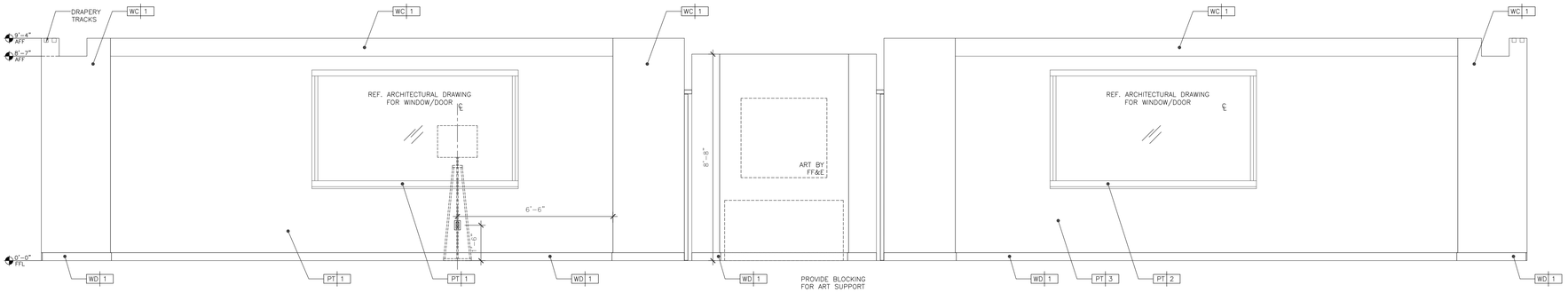

1 CHAIRMAN S-7 ELEVATION
Scale: 1/2"=1'-0"

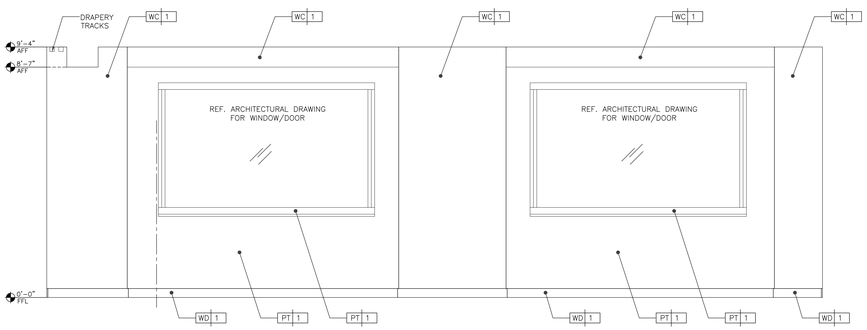

2 CHAIRMAN S-7 ELEVATION
Scale: 1/2"=1'-0"

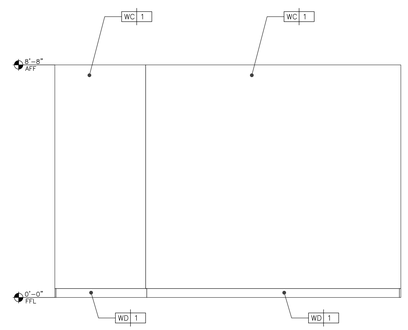

3 CHAIRMAN S-7 ELEVATION
Scale: 1/2"=1'-0"

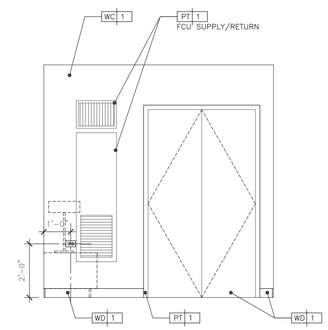

4 CHAIRMAN S-7 ELEVATION
Scale: 1/2"=1'-0"

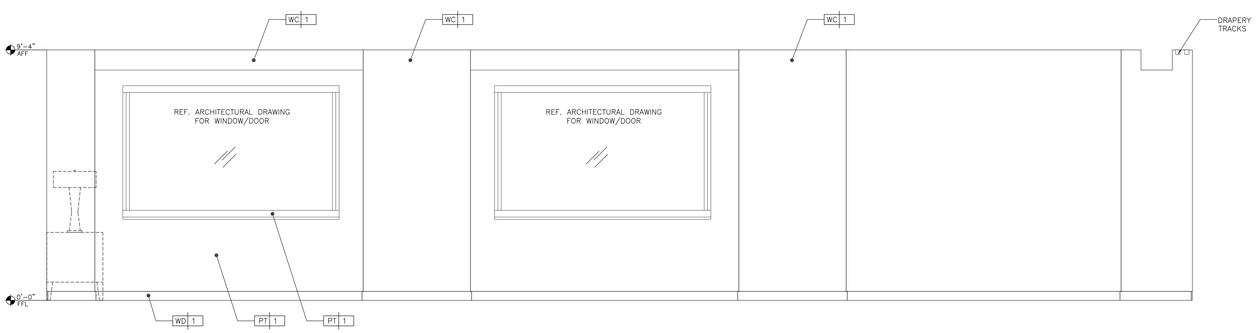

5 PRESIDENTIAL S-8 ELEVATION
Scale: 1/2"=1'-0"

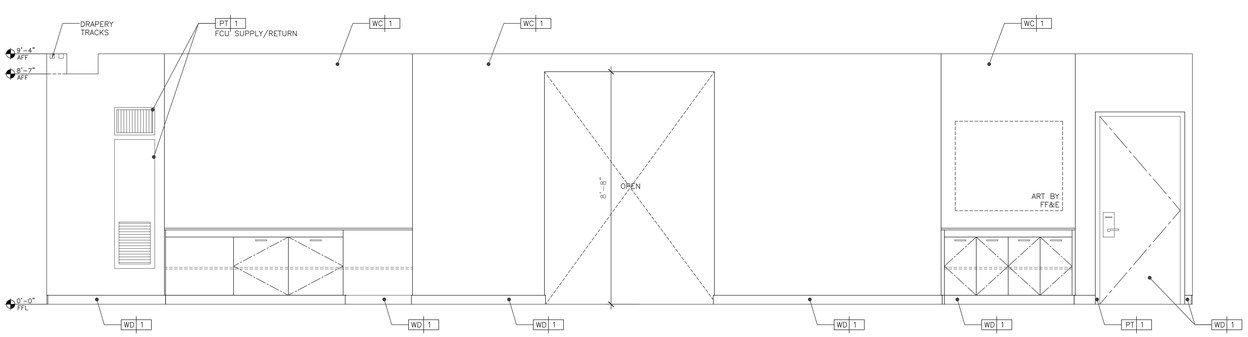

6 PRESIDENTIAL S-8 ELEVATION
Scale: 1/2"=1'-0"

KEY NOTES

SHEET NOTES

HILTON AMERICAS CONVENTION CENTER HOTEL

OWNER:

HOUSTON CONVENTION CENTER HOTEL CORPORATION

Two Houston Center
909 Fannin, Suite 3210
Houston TX 77010
Telephone 713.437.6898
Facsimile 713.437.6938

DEVELOPMENT MANAGER:

INTERIOR ARCHITECT:

Wilson Associates
Interior Architectural Design

3811 Turtle Creek Blvd.
16th Floor Dallas, Texas
75219 Tel (214) 521-6753
Fax (214) 521-0207

Issue	Date & Issue Description	By	Check
--	--/--/--	--	--

Seal/Signature

REGISTERED INTERIOR DESIGNER
COMPLIANCE FIRM REGISTRATION
1433
STATE OF TEXAS

Constance H. Jackson
10-18-2018

Project Name
HILTON AMERICAS CONVENTION CENTER HOTEL

Project Number
4993

CAD File Name
ID.333.PS7-8_PS S-7, S-8 KEY ELEVATIONS.DWG

Description
CHAIRMAN & PRESIDENTIAL SUITES S-7, S-8 KEY ELEVATIONS

Scale
0 2" 4" 8" 16"

ID.333.PS7-8

© 2001 Gensler

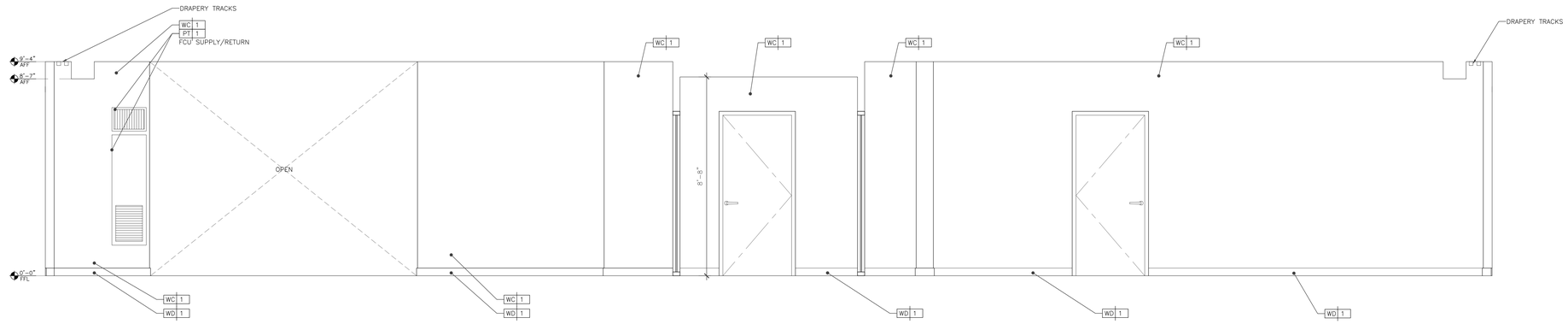

1 SUITES-9 BEDROOM ELEVATION
Scale: 1/2"=1'-0"

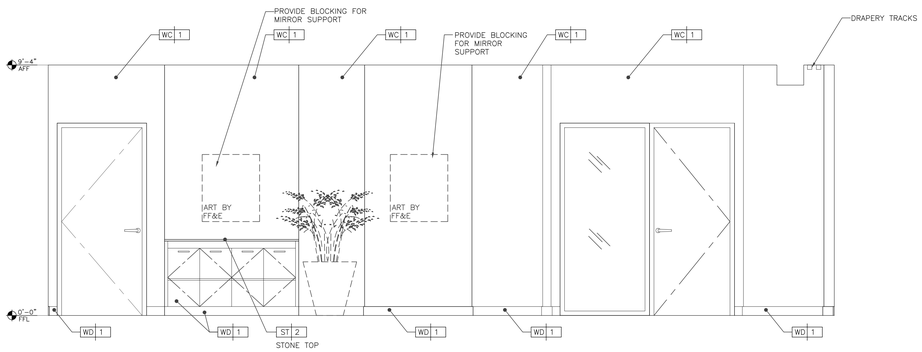

2 SUITES-9 BEDROOM ELEVATION
Scale: 1/2"=1'-0"

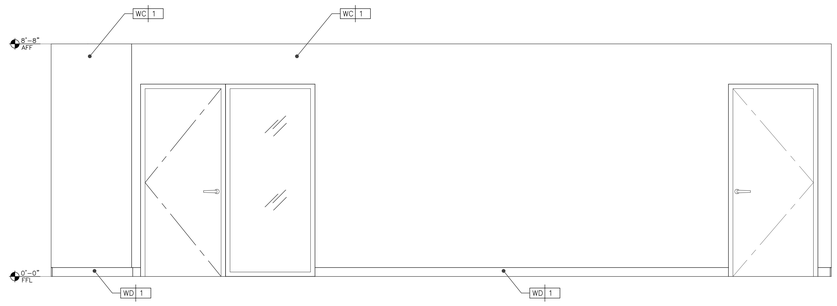

3 SUITES-9 BEDROOM ELEVATION
Scale: 1/2"=1'-0"

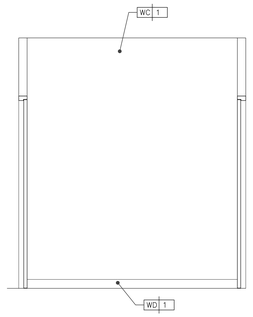

4 SUITES-9 KITCHEN ELEVATION
Scale: 1/2"=1'-0"

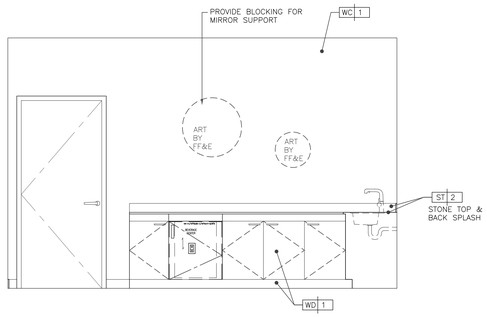

5 SUITES-9 KITCHEN ELEVATION
Scale: 1/2"=1'-0"

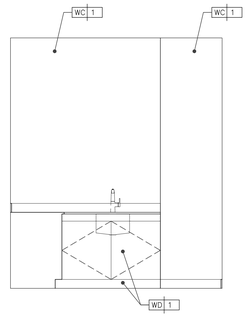

6 SUITES-9 KITCHEN ELEVATION
Scale: 1/2"=1'-0"

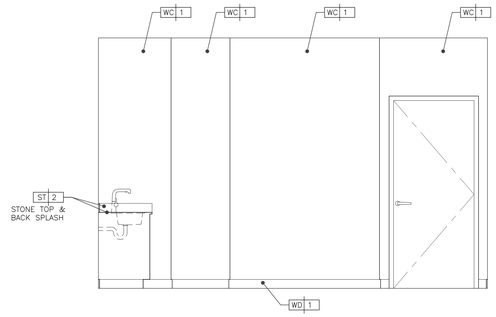

7 SUITES-9 KITCHEN ELEVATION
Scale: 1/2"=1'-0"

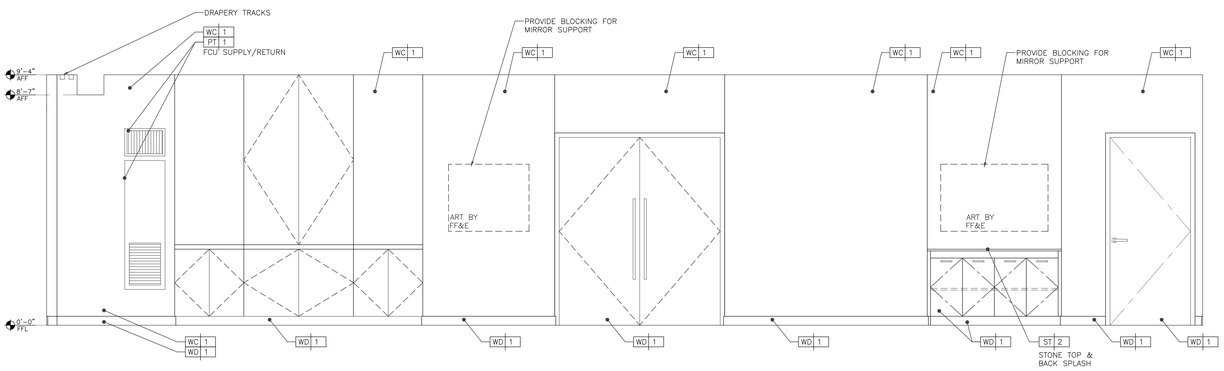

8 SUITES-10 BEDROOM ELEVATION
Scale: 1/2"=1'-0"

KEY NOTES

SHEET NOTES

HILTON AMERICAS CONVENTION CENTER HOTEL

OWNER:

HOUSTON CONVENTION CENTER HOTEL CORPORATION

Two Houston Center
909 Fannin, Suite 3210
Houston TX 77010
Telephone 713.437.6898
Facsimile 713.437.6938

DEVELOPMENT MANAGER:

INTERIOR ARCHITECT:

Wilson Associates
Interior Architectural Design

3811 Turtle Creek Blvd.
16th Floor Dallas, Texas
75219 Tel (214) 521-6753
Fax (214) 521-0207

Issue	Date & Issue Description	By	Check
-- --	-- -- / -- -- / -- --	-- --	-- --

Seal/Signature

REGISTERED INTERIOR DESIGNER CONSTANCE H. JACKSON 1433 STATE OF TEXAS

10-18-2018

Project Name

HILTON AMERICAS CONVENTION CENTER HOTEL

Project Number

4993

CAD File Name

ID.334.PS9-10_ELEVATION

Description

PRESIDENTIAL SUITES S-9, S-10 KEY ELEVATIONS

Scale

0 2" 4" 8" 16"

ID.334.PS9-10

©2001 Gensler

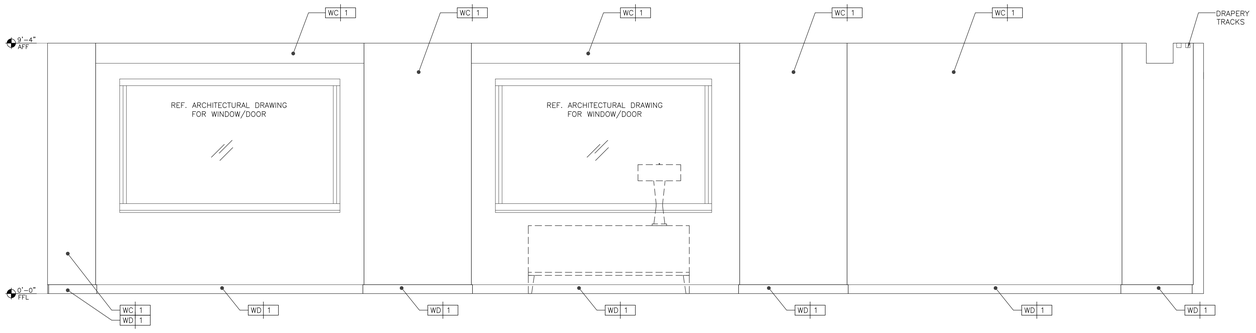

1 SUITES-10 BEDROOM ELEVATION
Scale: 1/2"=1'-0"

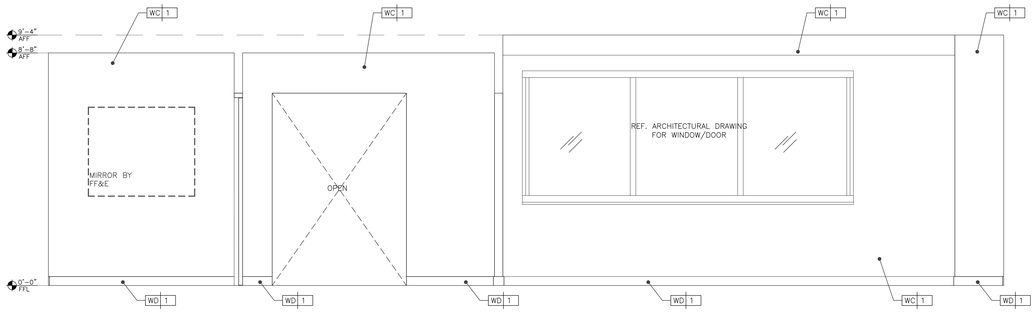

2 SUITES-10 BEDROOM ELEVATION
Scale: 1/2"=1'-0"

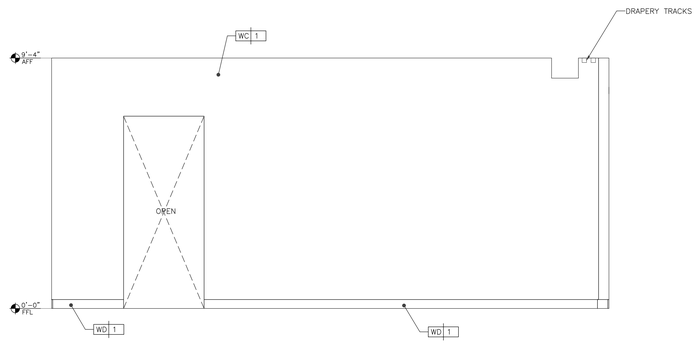

3 SUITES-10 BEDROOM ELEVATION
Scale: 1/2"=1'-0"

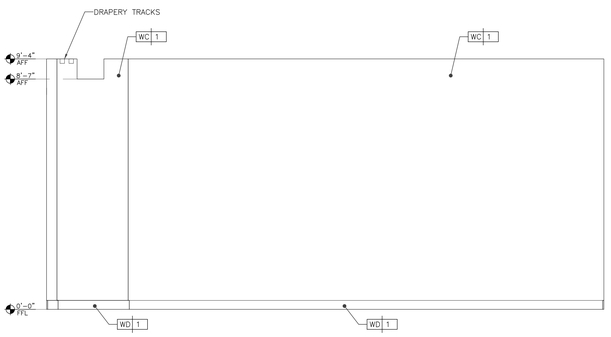

4 SUITES-10 BEDROOM ELEVATION
Scale: 1/2"=1'-0"

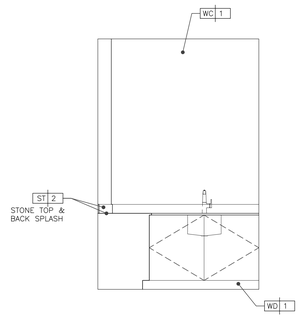

5 SUITES-10 KITCHEN ELEVATION
Scale: 1/2"=1'-0"

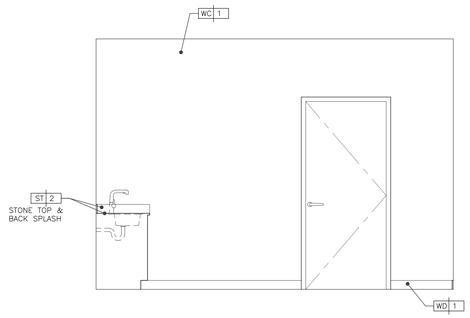

6 SUITES-10 KITCHEN ELEVATION
Scale: 1/2"=1'-0"

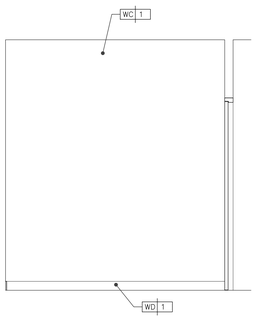

7 SUITES-10 KITCHEN ELEVATION
Scale: 1/2"=1'-0"

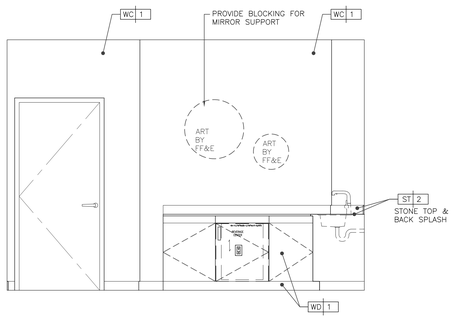

8 SUITES-10 KITCHEN ELEVATION
Scale: 1/2"=1'-0"

KEY NOTES

SHEET NOTES

HILTON AMERICAS CONVENTION CENTER HOTEL

OWNER:

HOUSTON CONVENTION CENTER HOTEL CORPORATION

Two Houston Center
909 Fannin, Suite 3210
Houston TX 77010
Telephone 713.437.6898
Facsimile 713.437.6938

DEVELOPMENT MANAGER:

INTERIOR ARCHITECT:

Wilson Associates
Interior Architectural Design

3811 Turtle Creek Blvd.
16th Floor Dallas, Texas
75219 Tel (214) 521-6753
Fax (214) 521-0207

Issue	Date & Issue Description	By	Check
-- --	-- -- / -- -- / -- --	-- --	-- --

Seal/Signature

REGISTERED INTERIOR DESIGNER CONSTANCE H. JACKSON 1433 STATE OF TEXAS

10-18-2018

Project Name

HILTON AMERICAS CONVENTION CENTER HOTEL

Project Number

4993

CAD File Name

ID.334.PS9-10_ELEVATION

Description

PRESIDENTIAL SUITES S-9, S-10 KEY ELEVATIONS

Scale

0 2" 4" 8" 16"

ID.334A.PS9-10

©2001 Gensler

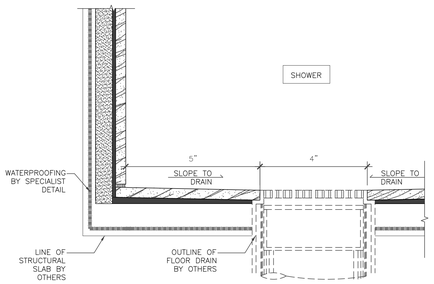

01 STONE/SHOWER CURB/TILE TRANSITION
Scale: 6"=1'-0"

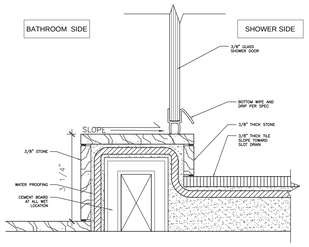

02 SLOT DRAIN DETAIL
Scale: 6"=1'-0"

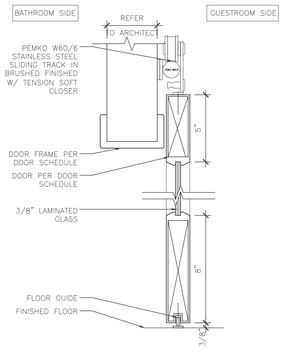

03 BARN DOOR HEADER
Scale: 3" = 1'-0"

KEY NOTES

SHEET NOTES

HILTON AMERICAS CONVENTION CENTER HOTEL

OWNER:

HOUSTON CONVENTION CENTER HOTEL CORPORATION

Two Houston Center
909 Fannin, Suite 3210
Houston TX 77010
Telephone 713.437.6898
Facsimile 713.437.6938

DEVELOPMENT MANAGER:

INTERIOR ARCHITECT:

Wilson Associates
Interior Architectural Design

3811 Turtle Creek Blvd.
16th Floor Dallas, Texas
75219 Tel (214) 521-6753
Fax (214) 521-0207

Issue	Date & Issue Description	By	Check
-- --	-- -- / -- -- / -- --	-- --	-- --

Seal/Signature

REGISTERED INTERIOR DESIGNER CONSTANCE H. JACKSON 1433 STATE OF TEXAS

Constance H. Jackson

10-18-2018

Project Name

HILTON AMERICAS CONVENTION CENTER HOTEL

Project Number

4993

CAD File Name

ID.400_Typical Details.DWG

Description

Typical Details

Scale

0 2" 4" 8" 16"

ID.400

©2001 Gensler

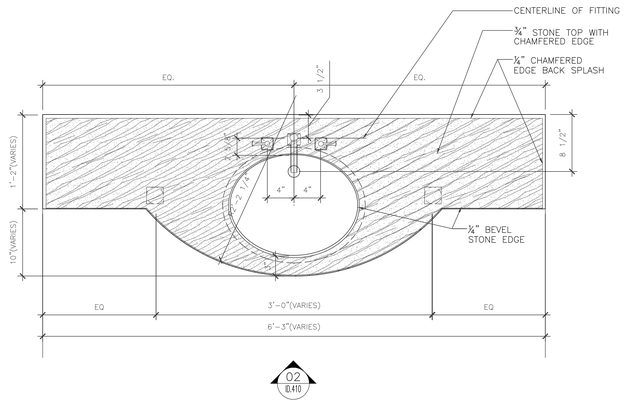

01 VANITY PLAN
Scale: 1-1/2" = 1'-0"

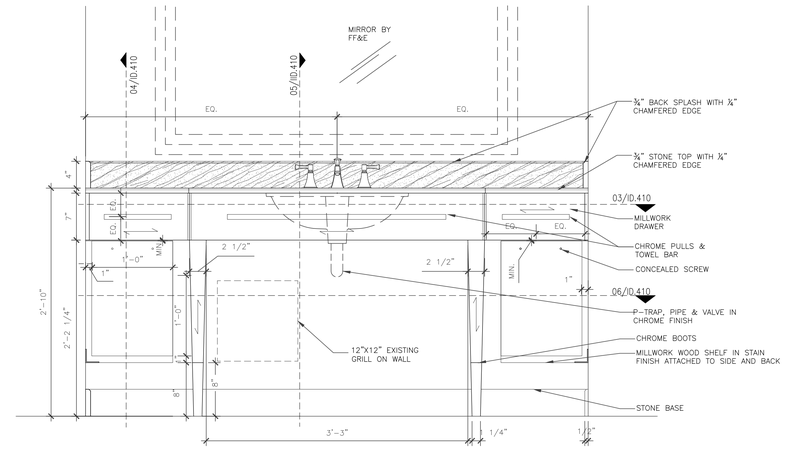

02 VANITY FRONT ELEVATION
Scale: 1-1/2" = 1'-0"

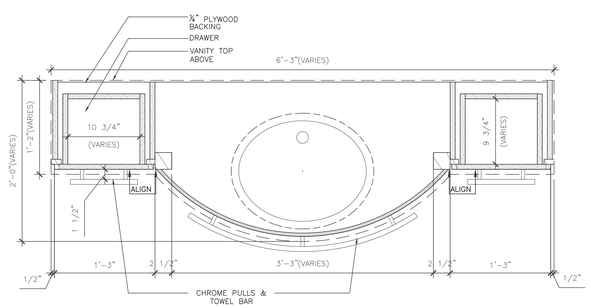

03 VANITY SECTION
Scale: 1-1/2" = 1'-0"

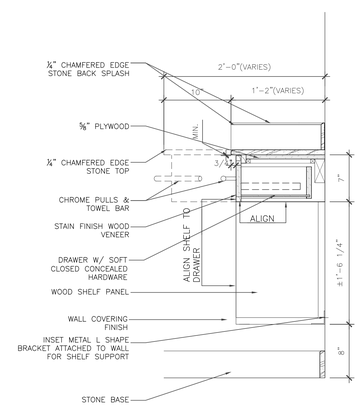

04 VANITY SECTION
Scale: 1-1/2" = 1'-0"

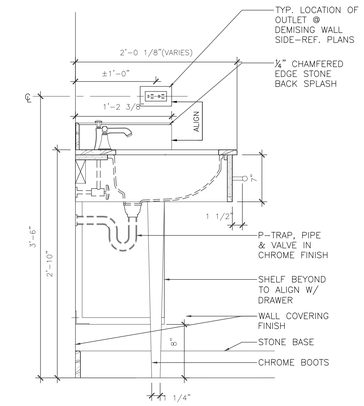

05 VANITY SECTION
Scale: 1-1/2" = 1'-0"

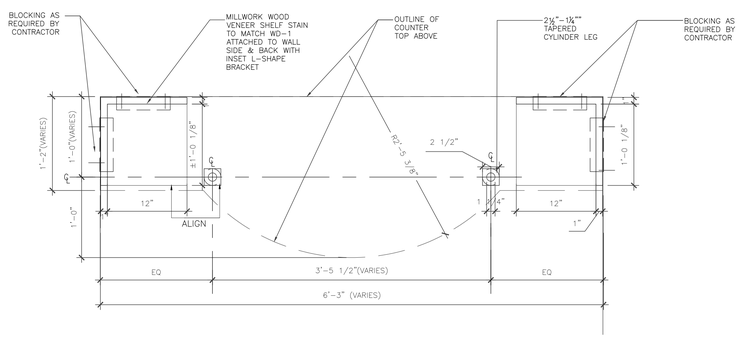

06 VANITY SECTION
Scale: 1-1/2" = 1'-0"

KEY NOTES

SHEET NOTES

HILTON AMERICAS CONVENTION CENTER HOTEL

OWNER:
HOUSTON CONVENTION CENTER HOTEL CORPORATION
DEVELOPMENT MANAGER:

Two Houston Center
909 Fannin, Suite 3210
Houston TX 77010
Telephone 713.437.6898
Facsimile 713.437.6938

INTERIOR ARCHITECT:
Wilson Associates
Interior Architectural Design

3811 Turtle Creek Blvd.
16th Floor Dallas, Texas
75219 Tel (214) 521-6753
Fax (214) 521-0207

Issue	Date & Issue Description	By	Check
--	--/--/--	--	--

Seal/Signature

REGISTERED INTERIOR DESIGNER CONSTANCE H. GAUKSON 1433 STATE OF TEXAS

Constance H. Gauckson 10-18-2018

Project Name
HILTON AMERICAS CONVENTION CENTER HOTEL

Project Number
4993

CAD File Name
ID.410

Description
VANITY DETAILS

Scale
0 2" 4" 8" 16"

ID.410

©2001 Gensler

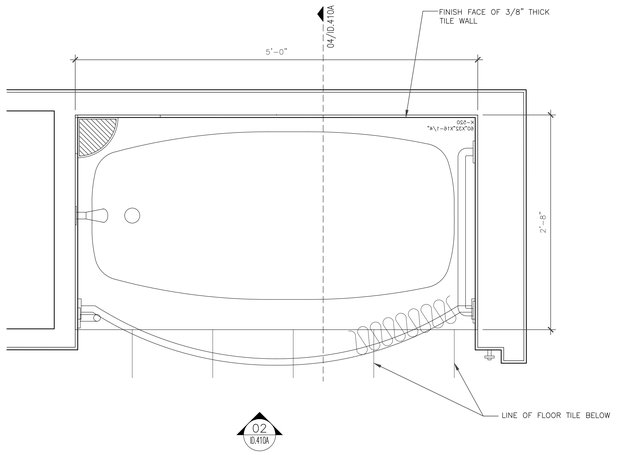

01 TUB PLAN
Scale: 1-1/2" = 1'-0"

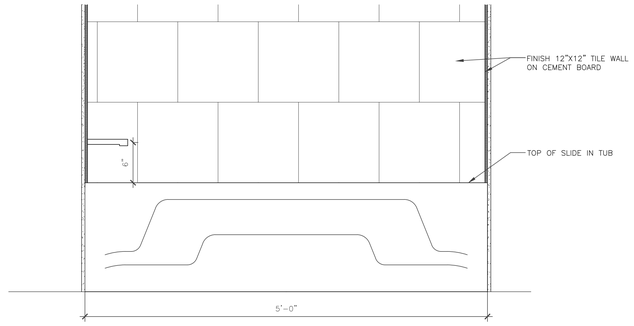

02 TUB ELEVATION
Scale: 1-1/2" = 1'-0"

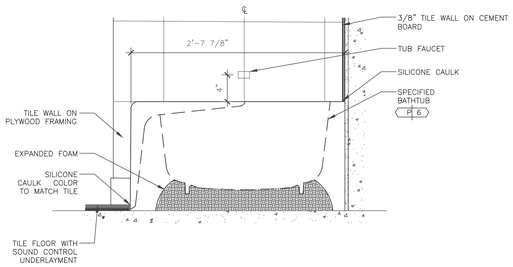

03 TUB SECTION
Scale: 1-1/2" = 1'-0"

KEY NOTES

SHEET NOTES

HILTON AMERICAS CONVENTION CENTER HOTEL

OWNER:

HOUSTON CONVENTION CENTER HOTEL CORPORATION

DEVELOPMENT MANAGER:

Two Houston Center
909 Fannin, Suite 3210
Houston TX 77010
Telephone 713.437.6898
Facsimile 713.437.6938

INTERIOR ARCHITECT:

Wilson Associates
Interior Architectural Design

3811 Turtle Creek Blvd.
16th Floor Dallas, Texas
75219 Tel (214) 521-6753
Fax (214) 521-0207

Issue	Date & Issue Description	By	Check
--	-- -- / -- -- / -- --	--	--

Seal/Signature

REGISTERED INTERIOR DESIGNER CONSTANCE H. JACKSON 1432 STATE OF TEXAS

Constance H. Jackson 10-18-2018

Project Name
HILTON AMERICAS CONVENTION CENTER HOTEL

Project Number
4993

CAD File Name
ID.410

Description
TUB DETAILS

Scale
0 2" 4" 8" 16"

ID.410A

© 2001 Gensler

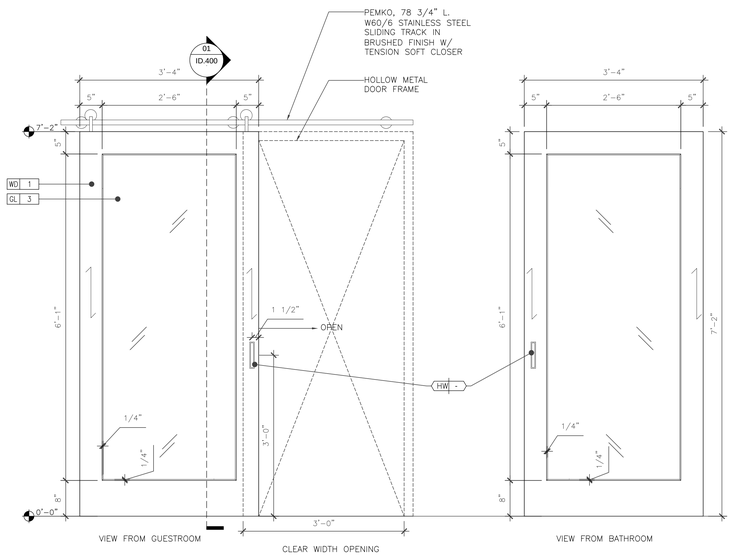

01 BATHROOM DOOR ELEVATION
Scale: 1"=1'-0"

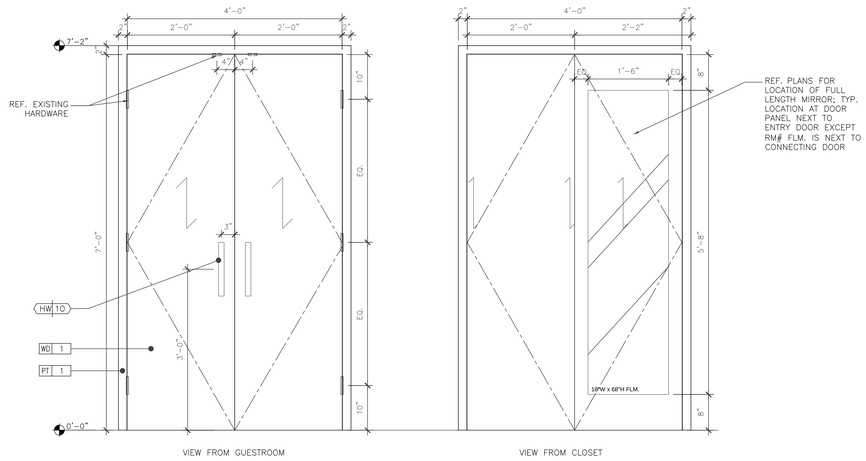

02 CLOSET DOOR ELEVATION
Scale: 1"=1'-0"

KEY NOTES

SHEET NOTES

HILTON AMERICAS CONVENTION CENTER HOTEL

OWNER:

HOUSTON CONVENTION CENTER HOTEL CORPORATION

Two Houston Center
909 Fannin, Suite 3210
Houston TX 77010
Telephone 713.437.6898
Facsimile 713.437.6938

DEVELOPMENT MANAGER:

INTERIOR ARCHITECT:

Wilson Associates
Interior Architectural Design

3811 Turtle Creek Blvd.
16th Floor Dallas, Texas
75219 Tel (214) 521-6753
Fax (214) 521-0207

Issue	Date & Issue Description	By	Check
--	--/--/--	--	--

Seal/Signature

REGISTERED INTERIOR DESIGNER CONSTANCE H. JACKSON 1433 STATE OF TEXAS

Constance H. Jackson

Project Name 10-18-2018

HILTON AMERICAS CONVENTION CENTER HOTEL

Project Number

4993

CAD File Name

ID.430.DWG

Description

DOOR SCHEDULE

Scale

0 2" 4" 8" 16"

ID.430

©2001 Gensler

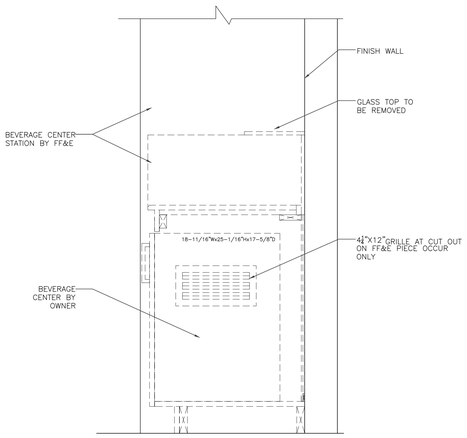

01 BEVERAGE CENTER SECTION–EXISTING
Scale: 1–1/2" = 1'–0"

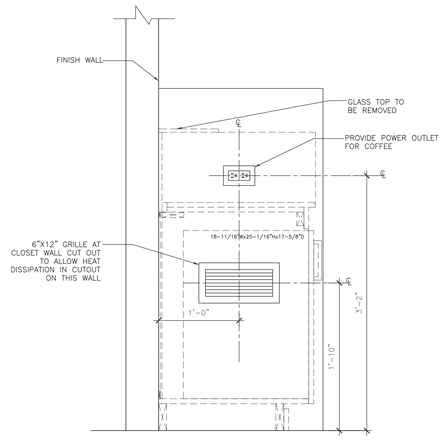

02 BEVERAGE CENTER SECTION–EXISTING
Scale: 1–1/2" = 1'–0"

KEY NOTES

SHEET NOTES

HILTON AMERICAS CONVENTION CENTER HOTEL

OWNER:

HOUSTON CONVENTION CENTER HOTEL CORPORATION

Two Houston Center
909 Fannin, Suite 3210
Houston TX 77010
Telephone 713.437.6898
Facsimile 713.437.6938

DEVELOPMENT MANAGER:

INTERIOR ARCHITECT:

Wilson Associates
Interior Architectural Design

3811 Turtle Creek Blvd.
16th Floor Dallas, Texas
75219 Tel (214) 521-6753
Fax (214) 521-0207

Issue	Date & Issue Description	By	Check
-- --	-- -- / -- -- / -- --	-- --	-- --

Seal/Signature

REGISTERED INTERIOR DESIGNER
CONSTANCE H. JACKSON
1433
STATE OF TEXAS

Constance H. Jackson

Project Name 10-18-2018

HILTON AMERICAS CONVENTION CENTER HOTEL

Project Number

4993

CAD File Name

ID.441.DWG

Description

MILLWORK DETAILS – BEVERAGE CENTER

Scale

0 2" 4" 8" 16"

ID.441

©2001 Gensler